R-SYSTEM

ZENEX MULTI & PLUS



IZEN
IMPLANT

ZENEX IMPLANT SYSTEM

ZENEX MULTI System 019

ZENEX PLUS System 069

ZENEX KIT 119

IZEN Implant,

innovative technology in pursuit of bright smile

Established in 2016 by developers and researchers who have spent more than 20 years on research and development in dental implants, IZEN Implant have working on developing innovative products to provide the best result to patients.
We will continue to grow into a company that meets customers' needs with safe and excellent products made of trust and continuous research and development.

IZEN Implant provides more convenient, stable, and optimized implant system by building product line-up with high-end technology of ZENEX MULTI and ZENEX PLUS.



Certification


SZUTEST
EC CERTIFICATE
According to Annex II of the Directive 93/42/EEC on Medical Devices
Full Quality Assurance System
Certificate Number: 2105-MED-2113601


SZUTEST
CERTIFICATE INFO AMENDMENT
SERTİFİKA BİLGİ DEĞİŞİKLİĞİ


SZUTEST
CERTIFICATE INFO AMENDMENT
SERTİFİKA BİLGİ DEĞİŞİKLİĞİ


SZUTEST
CERTIFICATE
Medical Devices Quality Management System
Izeniplant Co., Ltd.
EN ISO 13485:2016
Design and Development, Production and Sales of Sterile Dental Implant, Sterile Dental Abutment, NonSterile Dental Abutment, Dental Surgical Instrument


SZUTEST
CERTIFICATE
Medical Devices Quality Management System
Izeniplant Co., Ltd.
EN ISO 13485:2016
Design and Development, Production and Sales of Sterile Dental Implants, Sterile & Non-Sterile Dental Abutments, Sterile Orthodontic Screw, Non-Sterile Dental Surgical Instruments and Orthodontic Surgical Instruments


SZUTEST
EC CERTIFICATE
According to Annex II of the Directive 93/42/EEC on Medical Devices
Full Quality Assurance System
Certificate Number: 2105-MED-2113601


특허증
CERTIFICATE OF PATENT
제 10-1714533 호
위의 발명은 「특허법」에 따라 특허등록원부에 등록되었음을 증명합니다.
This is to certify that, in accordance with the Patent Act, a patent for the invention has been registered at the Korean Intellectual Property Office.
특허청장
COMMISSIONER,
KOREAN INTELLECTUAL PROPERTY OFFICE
최 등 규


특허증
CERTIFICATE OF PATENT
제 10-1714541 호
위의 발명은 「특허법」에 따라 특허등록원부에 등록되었음을 증명합니다.
This is to certify that, in accordance with the Patent Act, a patent for the invention has been registered at the Korean Intellectual Property Office.
특허청장
COMMISSIONER,
KOREAN INTELLECTUAL PROPERTY OFFICE
최 등 규


특허증
CERTIFICATE OF PATENT
제 10-2062575 호
위의 발명은 「특허법」에 따라 특허등록원부에 등록되었음을 증명합니다.
This is to certify that, in accordance with the Patent Act, a patent for the invention has been registered at the Korean Intellectual Property Office.
특허청장
COMMISSIONER,
KOREAN INTELLECTUAL PROPERTY OFFICE
박 원 주


특허증
CERTIFICATE OF PATENT
제 10-1684959 호
위의 발명은 「특허법」에 따라 특허등록원부에 등록되었음을 증명합니다.
This is to certify that, in accordance with the Patent Act, a patent for the invention has been registered at the Korean Intellectual Property Office.
특허청장
COMMISSIONER,
KOREAN INTELLECTUAL PROPERTY OFFICE
최 등 규


Kaltest
CERTIFICATE OF REGISTRATION
This certificate has been awarded to the company
Izeniplant Co., Ltd.
1, 2-dong, 26-32, Suworam 4-gil, Seotan-myeon, Pyeongtaek-si, Gyeonggi-do, Republic of Korea
To certify that the implemented quality management system complies with
ISO 9001:2015
For the activities described below
Design, Development and production of Dental Implant Superstructure(Abutment), Dental Implant Fixture, Dental Implant Instrument and Orthodontic Anchor
EAC 23
Kaltest Certification and Training Services Ltd. :


의료기기 제조 및 품질관리 기준 적합인정서
(Certificate of GMP)
GMP
KTR
KOREA TESTING & RESEARCH INSTITUTE


의료기기 제조 및 품질관리 기준 적합인정서
(Certificate of GMP)
GMP
KTC
Korea Testing Certification



History & Global Network



2016. 03
Foundation of IZEN Implant

2016. 06
Clearance of manufacturing licenses for medical devices Report medical device items (Screw driver for dental implant surgery)

2016. 12
Patent registration (Driver holder and driver apparatus for dental engineering, No. 10-1684959)

2017. 03
Patent registration (Driver holder for dental apparatus, No. 10-1714533, No. 10-1714541)

2018. 08
Venture Business Certificate (No. 20180110278)

2018. 09
Foundation of Corporate Affiliated Research Institute (No. 2018114470)

2019. 06
Clearance of small businesses technology development project (Development of Dental implant abutments and scan body for dental digital system)

2019. 12
Patent registration (Abutment and dental implant, No. 10-2062575)

2021. 05
Medical Device Item Certification (Dental implant Fixture)

2022. 04
FDA 510 Clearance (K211090)

2023. 07
Medical Device Item Certification (Dental implant Guide)

2023. 07
Clearance of FDA 510 (k230630)

2024. 05
Renewal of ISO 13485:2016 and CE MDD Certifications

2024. 06
Certification of compliance with KGMP (Korea Good Manufacturing Practice) Hwaseong Plant

2024. 09
ISO 13485:2016 and CE MDD Certification Hwaseong Plant

2024. 10
FDA 510(k) Clearance (K240560) ZENEX Implant System Long



2017. 09

Registration of medical devices (Apparatus for dental implant surgery)

2018. 03

Certification of medical device items compliance with manufacturing and quality control standards (KGMP)

2018. 04

Medical Device Item Certification (Dental implant abutments)

2018. 07

Clearance of ISO 9001: 2015

2020. 01

Medical Device Item Certification (Orthodontic Screw)

2020. 12

Medical Device Item Certification (Dental implant abutments)

2021. 01

Patent registration (Implant Lab Analog, No. 10-2209274)

2021. 05

Clearance of ISO13485: 2016 & CE MDD

2023. 08

FDA 510(k) Clearance (K231557) ZENEX Implant System FreeMilling & CCM Cast Abutment

2023. 10

Patent registration (Assistant device for Implant Surgical guide No. 2088060)

2023. 12

FDA 510(k) Clearance (K233163) ZENEX Implant System Short

2024. 01

FDA 510(k) Clearance (K232170) Ti Link Abutment

MANUFACTURER

Manufacturing



Materials

Fixture and Abutment of ZENEX MULTI & ZENEX PLUS Implant System are produced by titanium which is certified by ASTM.

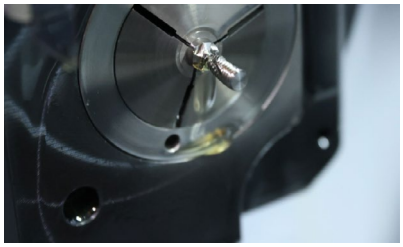

Manufacture by CNC Machine

In order to product Fixture and Abutment of ZENEX MULTI & Zenex PLUS Implant System, the raw materials are manufactured by CNC Machine.



Manufacture of Half-Finished product

Fixture and Abutment of ZENEX MULTI & Zenex PLUS Implant System are manufactured as a Half-Finished product based on a design of each product.

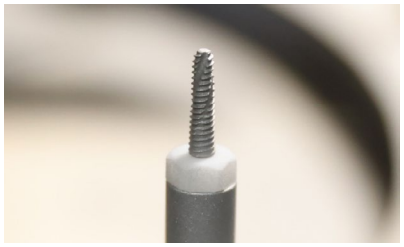

Sand Blasting

In case of Fixture, the roughness of surface is increased physically by blasting Alumina Powder for osseointegration through getting a wide SLA surface.

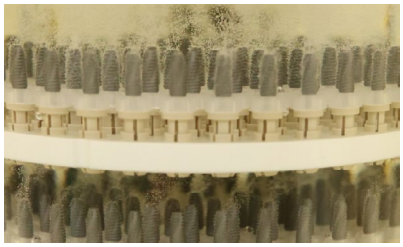

Etching

In case of Fixture, the roughness of surface is widen by chemical corrosion. After a SLA surface treatment, the surface inspection is done whether any residual acid is on the fixture.



TiN Coating

For classifying product and aesthetic impression, the electronic-chemical methods are used artificially for TiN coating as a gold color. Applied for some kinds of Abutments.

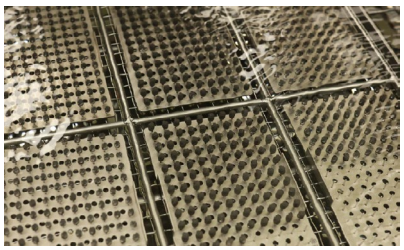

Cleaning

Final cleaning for a perfect removal of pollutant is proceeded in the Clean Room. After final cleaning, the inspection will be taken place.

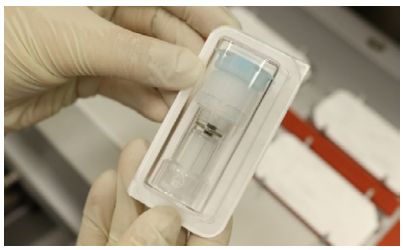

Packing

After cleaning products, the packing is done in the Clean Room. The packing is proceeded by automatic system without any foreign pollution.



Sterilization

For some products, it is sterilized by the short-wavelength of gamma radiation. It is possible to check the sterilization through a color of sticker on the package changed by a gamma radiation. Applied product: Fixture, Cover Screw, Healing Abutment & Multi Healing Cap.

Quality Management

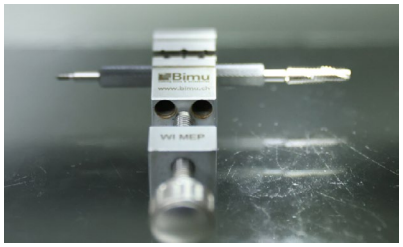

Dimension Management

After manufacturing product (fixture), Dimension of product is tested by non-contact visual microscope to measure precise dimension.



Stability of product

Our products are tested by fixation force and screw loosening for providing a stable product.

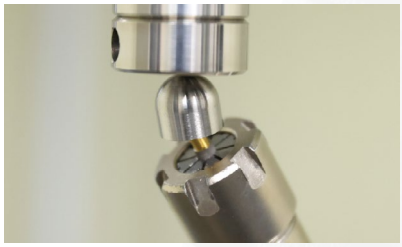

Fatigue Test

For providing the strength of product and a long-term safety, a fatigue test is done by measuring a mechanical force. Based on ISO14801:2016, the test is taken place.

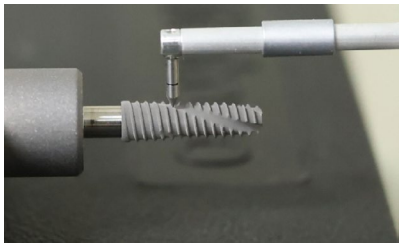

Surface management

In order to maintain a stable roughness of SLA Implant surface, the roughness of surface is tested in each lot.

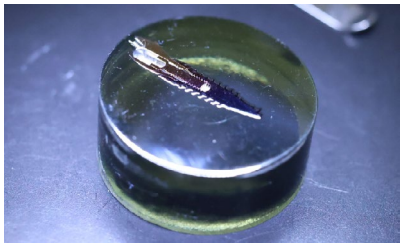

Connection Management

We observe the fixture and abutment are connected internally without any problem before the shipment.

ZENEX MULTI R-System Contents

024 ZENEX MULTI R-System Fixture 

027 Cover Screw 

028 Healing Abutment 

031 Temporary Abutment 

032 Cemented Abutment 

034 Angled Abutment 

037 FreeMilling Abutment 

039 CCM Cast Abutment 

040 Pick-up Impression Coping 

042 Transfer Impression Coping 

044 Fixture Lab Analog 

047 Multi Straight Abutment 

048 Multi Angled Abutment 

049 Multi Temporary Cylinder 

049 Multi CCM Cast Cylinder 

050 Multi Plastic Cast Cylinder 

050 Multi Ti Link Cylinder 

051 Multi Pick-up Impression Coping 

051 Multi Transfer Impression Coping 

052 Multi Lab Analog 

052 Multi Healing Cap 

053 Multi ScanBody 

053 Multi Straight Abutment Driver 

055 Ball Abutment 

066 Ball Abutment Cap Set 

056 Ball Abutment Retainer Set 

057 Ball Abutment O-ring Set 

057 Ball Abutment Lab Analog 

058 Ball Abutment Driver 

059 Kerator Abutment 

060 Kerator Angled Abutment 

061 Kerator CDPH Set 

061 Kerator Male Cap 

062 Kerator Magic Tool 

062 Kerator Torque Tip 

063 Kerator Impression Coping 

063 Kerator Lab Analog 

065 ScanBody 

066 Ti Link Abutment 

067 Ti Blank Abutment 

ZENEX PLUS R-System Contents

074 ZENEX PLUS R-System Fixture 

076 Cover Screw 

077 Healing Abutment 

081 Temporary Abutment 

082 Cemented Abutment 

084 Angled Abutment 

087 FreeMilling Abutment 

089 CCM Cast Abutment 

090 Pick-up Impression Coping 

092 Transfer Impression Coping 

094 Fixture Lab Analog 

097 Multi Straight Abutment 

098 Multi Angled Abutment 

099 Multi Temporary Cylinder 

099 Multi CCM Cast Cylinder 

100 Multi Plastic Cast Cylinder 

100 Multi Ti Link Cylinder 

101 Multi Pick-up Impression Coping 

101 Multi Transfer Impression Coping 

102 Multi Lab Analog 

102 Multi Healing Cap 

103 Multi ScanBody 

103 Multi Straight Abutment Driver 

105 Ball Abutment 

106 Ball Abutment Cap Set 

106 Ball Abutment Retainer Set 

107 Ball Abutment O-ring Set 

107 Ball Abutment Lab Analog 

108 Ball Abutment Driver 

109 Kerator Abutment 

110 Kerator Angled Abutment 

111 Kerator CDPH Set 

111 Kerator Male Cap 

112 Kerator Magic Tool 

112 Kerator Torque Tip 

113 Kerator Impression Coping 

113 Kerator Lab Analog 

115 ScanBody 

116 Ti Link Abutment 

117 Ti Blank Abutment 

Kit Contents

122 ZENEX SURGERY KIT 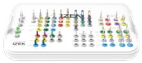

125 Guide Drill 

125 Lindemann Drill

126 Drill Extension 

126 Twist Drill 

127 Step Drill 

128 Drill Stopper 

128 Cortical Drill 

129 Direction Pin 

130 Parallel Pin 

130 Fixture Driver 

132 1.2 Hex Driver 

132 Torque Wrench 

133 Depth Gauge 

133 Steel Bowl 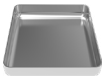

138 ZENEX SIMPLE KIT 

140 Guide Drill 

140 Lindemann Drill

141 Drill Extension 

141 Twist Drill 

142 Drill Stopper 

142 Cortical Drill 

143 Direction Pin 

144 Parallel Pin 

144 Fixture Driver 
146 1.2 Hex Driver 
146 Torque Wrench 
147 Depth Gauge 
150 ZENEX EASY SURGERY KIT 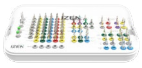
153 Guide Drill 
153 Lindemann Drill
154 Drill Extension 
154 Step Drill 
156 Cortical Drill 
156 Direction Pin 
157 Parallel Pin 
157 Fixture Driver 
159 1.2 Hex Driver 
159 Torque Wrench 
160 Depth Gauge 
160 Steel Bowl 
164 ZENEX SUPERWIDE KIT 
167 Guide Drill 
167 Lindemann Drill
168 Drill Extension 
168 Step Drill 
168 Cortical Drill 
169 Direction Pin 

Kit Contents

170 Parallel Pin 

170 Fixture Driver 

172 1.2 Hex Driver 

172 Torque Wrench 

173 Depth Gauge 

176 ZENEX PROSTHETIC KIT 

178 1.2 Hex Driver 

178 1.2 Hex Machine Screw Driver 

179 Abutment Remover 

179 Finger Driver for Driver Shaft 

180 Ball Abutment Driver 

180 Multi Straight Abutment Driver 

181 Torque Wrench 

181 Kerator Magic Tool 

182 Kerator Torque Tip 

184 ZENEX GUIDE KIT 

187 ZENEX Guide Tissue Punch 

187 ZENEX Guide Flattening Drill 

188 Drill Extension 

188 ZENEX Guide Initial Drill 

189 ZENEX Guide Twist Drill 

190 ZENEX Guide Cortical Drill 

190 ZENEX Guide Fixture Driver 

192 ZENEX Guide Anchor Drill 

192 ZENEX Guide Anchor Screw 
193 Mount Driver 
193 Shank Driver 
194 1.2 Hex Driver 
194 Torque Wrench 
195 Depth Gauge 
195 Steel Bowl 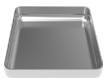
200 ZENEX GUIDE MINI KIT 
203 ZENEX Guide Tissue Punch 
203 ZENEX Guide Flattening Drill 
204 Drill Extension 
204 ZENEX Guide Initial Drill 
205 ZENEX Guide Twist Drill 
206 ZENEX Guide Cortical Drill 
206 ZENEX Guide Fixture Driver 
208 Shank Driver 
208 1.2 Hex Driver 
209 Torque Wrench 
209 Depth Gauge 
212 ZENEX GUIDE WIDE KIT 
215 ZENEX Guide Tissue Punch 
215 ZENEX Guide Flattening Drill 
216 Drill Extension 
216 ZENEX Guide Initial Drill 

Kit Contents

217 ZENEX Guide Twist Drill 

218 ZENEX Guide Cortical Drill 

218 ZENEX Guide Fixture Driver 

220 Shank Driver 

220 1.2 Hex Driver 

221 Torque Wrench 

221 Depth Gauge 

238 Tissue Punch 

238 Trephine Drill 

239 Bone Profiler 

240 ZENEX Guide Start Drill 

ZENEX MULTI
R-System

ZENEX MULTI R-System

COMPOSITION

024 ZENEX MULTI R-System Fixture
027 Cover Screw
028 Healing Abutment
030 Prosthetic Flow Chart I
031 Temporary Abutment
032 Cemented Abutment
034 Angled Abutment
037 FreeMilling Abutment
039 CCM Cast Abutment
040 Pick-up Impression Coping
042 Transfer Impression Coping
044 Fixture Lab Analog
046 Prosthetic Flow Chart II
047 Multi Straight Abutment
048 Multi Angled Abutment
049 Components of Multi Abutment
054 Prosthetic Flow Chart III
055 Ball Abutment
056 Components of Ball Abutment
059 Kerator Abutment
060 Kerator Angled Abutment
061 Components of Kerator Abutment
064 Prosthetic Flow Chart IV
065 ScanBody
066 Ti Link Abutment
067 Ti Blank Abutment

ZENEX MULTI R-System

- Design features

- Designed for various types of bone

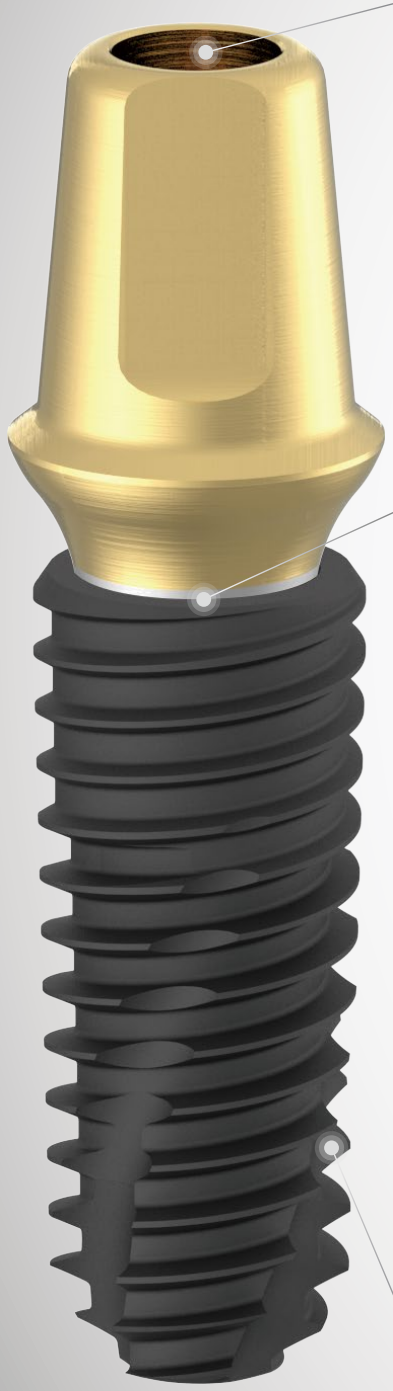

Post shape (Rounded top) optimized for digital dentistry system
Wide cross-section to prevent crown rotation and secure accurate placement.
Wide marginal area to prevent crown fracture
Small screw guide hole to secure strength of abutment
Optimized abutment screw for Short Fixture



5° tapered connection to secure strong fixation
Internal screw for
easy tightening and separation of abutment

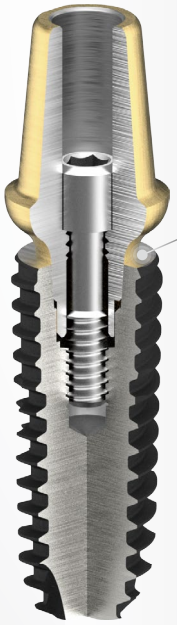

Platform Switching
Prevents crestal bone loss after implant placement
and provides esthetic result

Tapered design to secure initial stability
Possible to secure initial stability on apex of fixture by realizing wide apical diameter.
0.8 Pitch double thread helps to reduce time for implant placement

ZENEX MULTI Implant
- Surface features

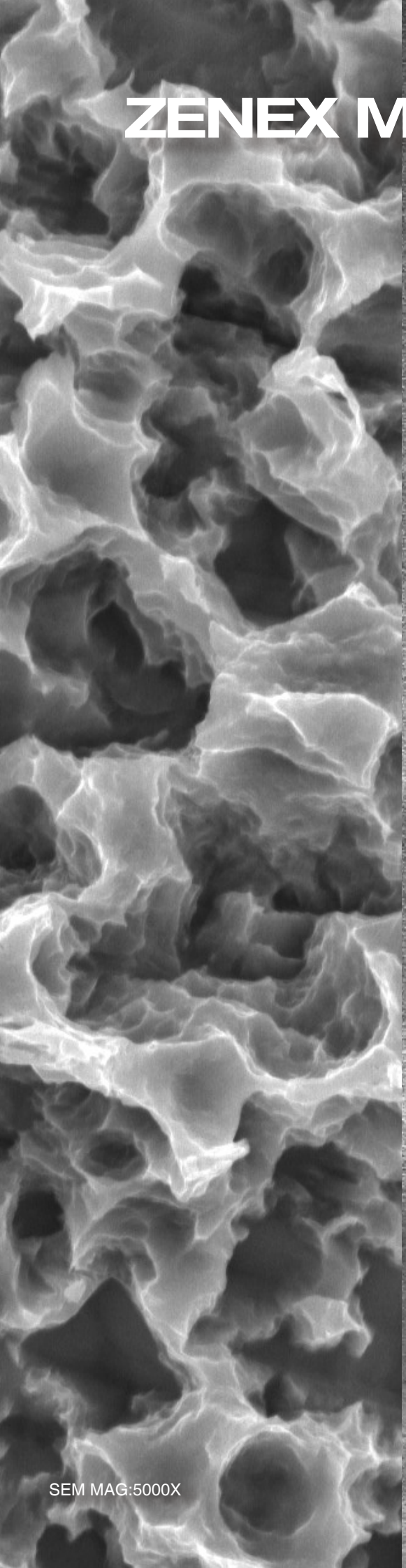

SEM MAG:5000X

SEM MAG:30X

SLA surface
($Al_2 O_3$ powder Sand-blast and Acid Etched)

- SLA surface for presenting ideal surface shape
- Surface Roughness Ra 2.0~3.0㎛

- Safe surface with no residual acid
- Safer than other implants (Proved by ICP/IC Analysis)

ZENEX MULTI Fixture R - System

Internal 5° tapered submerged type implant
SLA surface implant
Tapered design to secure initial stability
Double thread design for securing width of internal connection and easy insertion
Possible to secure initial stability on apex of fixture by realizing wide apical diameter.
Recommended torque for implant placement: Less than 30~45Ncm
Material: Titanium

For Wide Fixture (Ø5.0, Ø5.5, Ø6.0, Ø7.0)
- Wide fixture with single thread for easy implant placement.
- 6mm length fixture enables to use in lower alveolar bone
- Radial shaped on upper part of fixture enables to be used for wide hole such as extraction socket

* Recommend to use fixture bigger than Ø4.5 mm for single case in posterior area

To order as a set as 'Fixture + Cover Screw'
: Product Code + S (ex: ZMRM3508S)

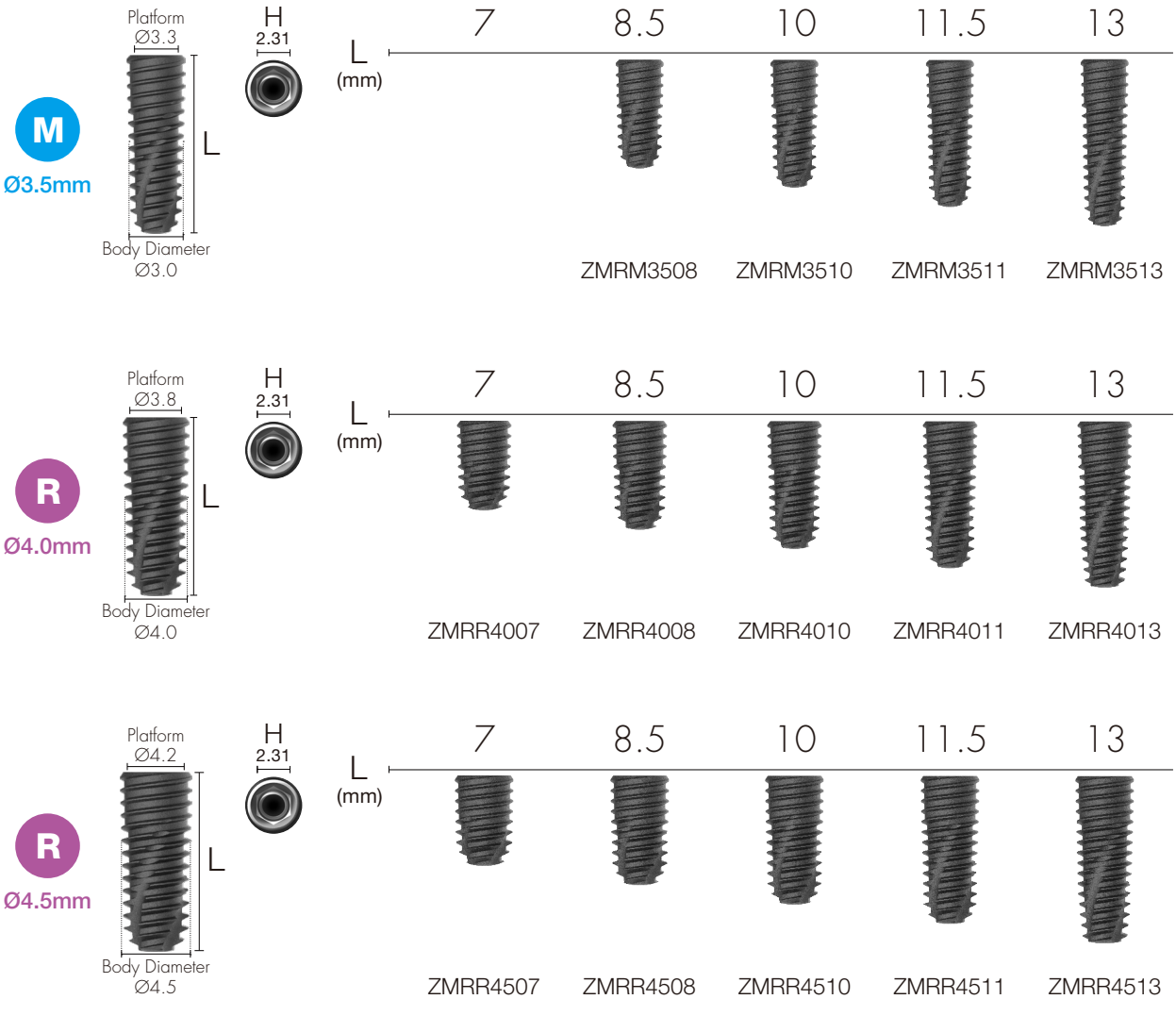

Nominal diameter may differ from actual diameter



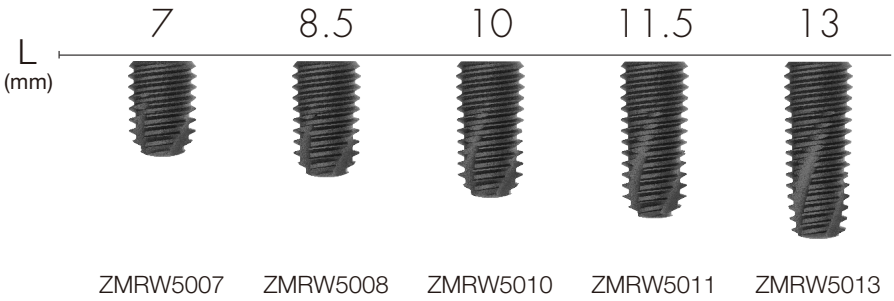

ZMRW5007 ZMRW5008 ZMRW5010 ZMRW5011 ZMRW5013

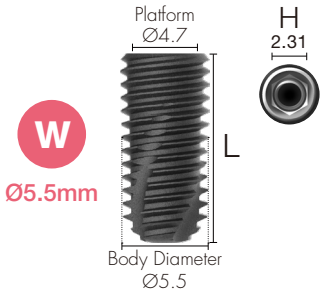

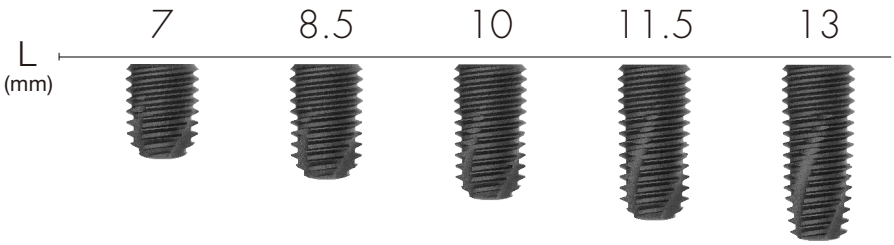

ZMRW5507 ZMRW5508 ZMRW5510 ZMRW5511 ZMRW5513

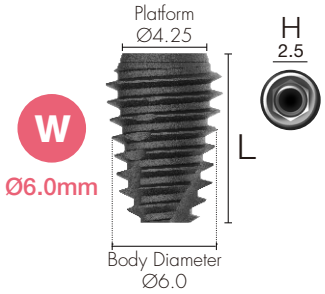

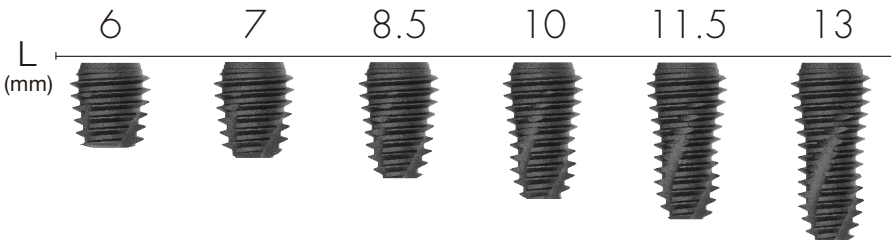

ZMRW6006 ZMRW6007 ZMRW6008 ZMRW6010 ZMRW6011 ZMRW6013

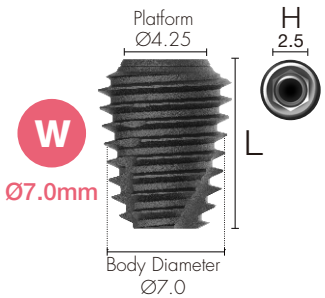

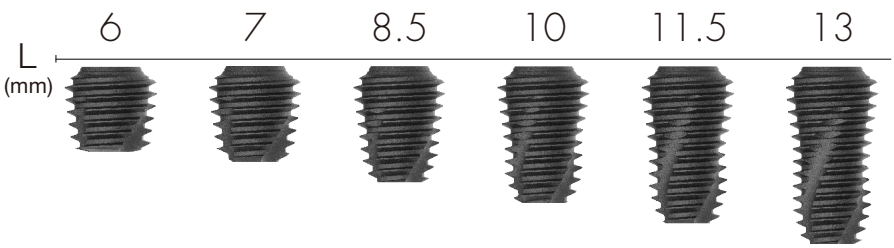

ZMRW7006 ZMRW7007 ZMRW7008 ZMRW7010 ZMRW7011 ZMRW7013

Nominal diameter may differ from actual diameter

Special Options

M
Ø3.5mm

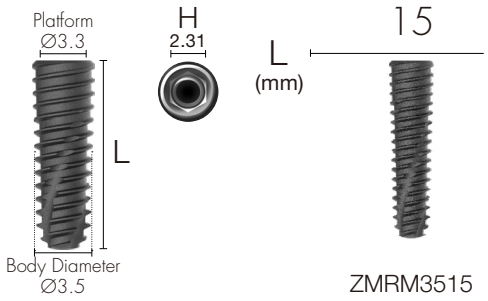

ZMRM3515

R
Ø4.0mm

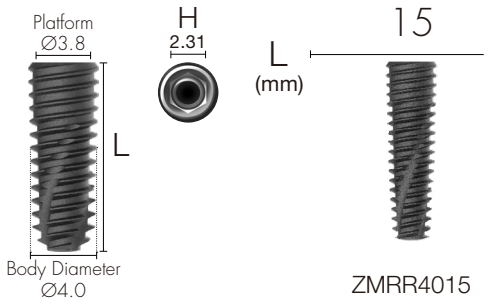

ZMRR4015

R
Ø4.5mm

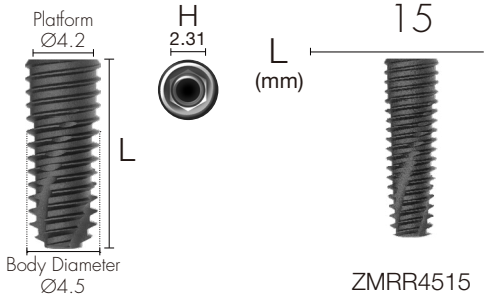

ZMRR4515

W
Ø5.0mm

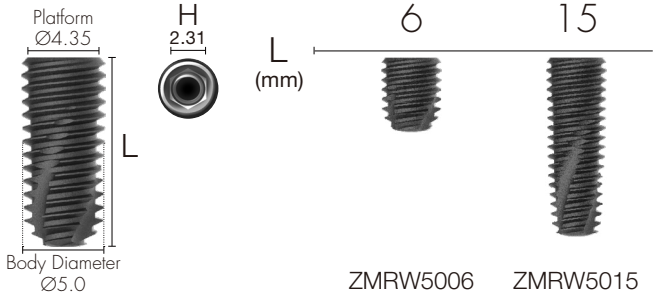

ZMRW5006 ZMRW5015

W
Ø5.5mm

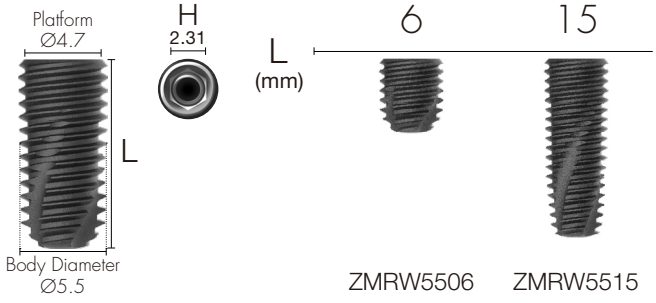

ZMRW5506 ZMRW5515

Nominal diameter may differ from actual diameter

Cover Screw

Select appropriate fixture height upon depth of implant placement.
Select specification fits for fixture connection.
Material: Titanium alloy

Tighten with 1.2 Hex Driver by hand.
Recommended tightening torque: 5~8Ncm

M/R/W



CSRR35S | CSRR35M | CSRR35L

Healing Abutment

Use Healing Abutment fits for the diameter of abutment.
Use specification fits for fixture connection.
Material: Titanium alloy

Tighten with 1.2 Hex Driver by hand.
Recommended tightening torque: 5~8Ncm

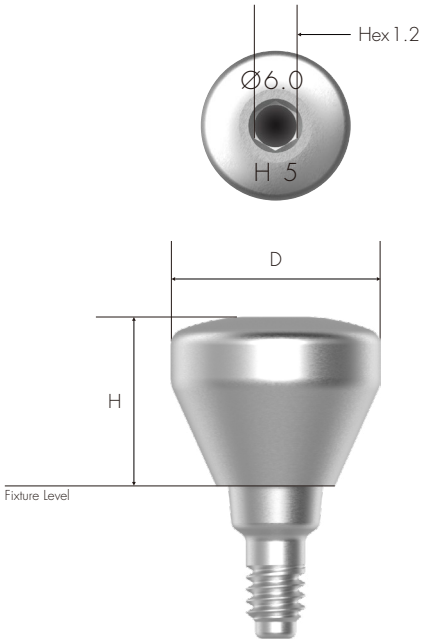

Mini, Regular & Wide

M/R/W

D (mm)	H (mm) 3.0	4.0	5.0
Ø4.0	HARR403	HARR404	HARR405
Ø5.0	HARR503	HARR504	HARR505
Ø6.0	HARR603	HARR604	HARR605
Ø7.0	HARR703	HARR704	HARR705
Ø8.0	HARR803	HARR804	HARR805
Ø9.0	HARR903	HARR904	HARR905

M/R/W

H (mm) / D (mm)	6.0	7.0	9.0
			
Ø4.0	HARR406	HARR407	HARR409
Ø5.0	HARR506	HARR507	HARR509
Ø6.0	HARR606	HARR607	HARR609
Ø7.0	HARR706	HARR707	HARR709
Ø8.0	HARR806	HARR807	

Prosthetic Flow Chart I



Temporary Abutment

31 p

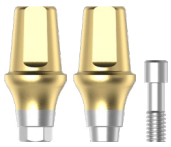

Cemented Abutment

32 p

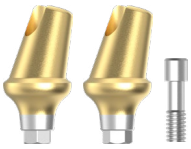

Angled Abutment

34 p



FreeMilling Abutment

37 p

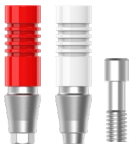

CCM Cast Abutment

39 p



Fixture Lab Analog

44 p



Pick-up Impression Coping

40 p



Transfer Impression Coping

42 p



Cover Screw

27 p



Healing Abutment

28 p



1.2 Hex Driver

132 p



ZENEX MULTI Fixture

24 p

Temporary Abutment

Abutment for manufacturing Screw-retained type temporary prosthesis
Select specification fits for fixture connection
Fixture Level Impression
Material: Titanium alloy

Tighten with 1.2 Hex Driver.
Recommended tightening torque: 20Ncm

To order as a set as 'Abutment + Abutment Screw'
: Product Code + S (ex: TARRH4010**S**)

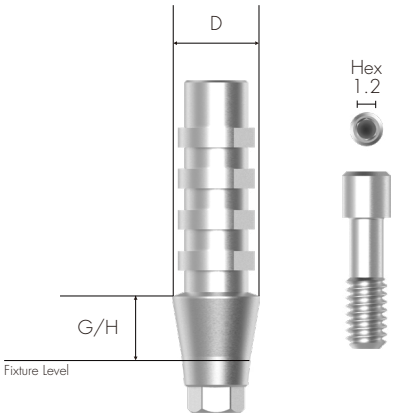

Mini, Regular & Wide

M/R/W

D Ø4.0mm

G/H (mm)

1.0		3.0	
			
Hex	Non-Hex	Hex	Non-Hex
TARRH4010	TARRN4010	TARRH4030	TARRN4030

Cemented Abutment

Abutment for manufacturing Cement/Combination-retained type prosthesis
Select specification fits for fixture connection
Customized by grinding (At least 3.0mm of Abutment Length above Fixture Platform needs to be maintained)
Fixture Level Impression
Material: Titanium alloy

Tighten with 1.2 Hex Driver.
Recommended tightening torque: 30Ncm

To order as a set as 'Abutment + Abutment Screw'
: Product Code + S (ex: CARRH40205**S**)

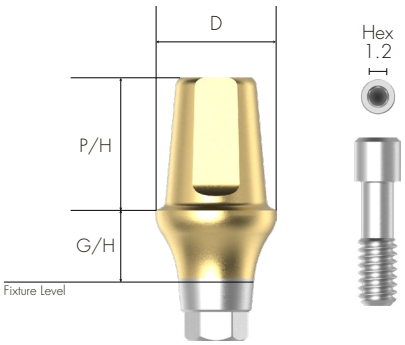

Mini, Regular & Wide

M/R/W
D Ø4.0mm

	G/H (mm)	2.0	3.0	4.0	5.0
	P/H (mm)				
Hex	5.5	CARRH40205	CARRH40305	CARRH40405	CARRH40505
	7.0	CARRH40207	CARRH40307	CARRH40407	CARRH40507
Non-Hex	5.5	CARRN40205	CARRN40305	CARRN40405	CARRN40505
	7.0	CARRN40207	CARRN40307	CARRN40407	CARRN40507

M/R/W

D Ø5.0mm

	G/H (mm)	2.0	3.0	4.0	5.0
					
	P/H (mm)				
Hex	5.5	CARRH50205	CARRH50305	CARRH50405	CARRH50505
	7.0	CARRH50207	CARRH50307	CARRH50407	CARRH50507
Non-Hex	5.5	CARRN50205	CARRN50305	CARRN50405	CARRN50505
	7.0	CARRN50207	CARRN50307	CARRN50407	CARRN50507

M/R/W

D Ø6.0mm

	G/H (mm)	2.0	3.0	4.0	5.0
					
	P/H (mm)				
Hex	5.5	CARRH60205	CARRH60305	CARRH60405	CARRH60505
	7.0	CARRH60207	CARRH60307	CARRH60407	CARRH60507
Non-Hex	5.5	CARRN60205	CARRN60305	CARRN60405	CARRN60505
	7.0	CARRN60207	CARRN60307	CARRN60407	CARRN60507

M/R/W

D Ø7.0mm

	G/H (mm)	2.0	3.0	4.0	5.0
					
	P/H (mm)				
Hex	5.5	CARRH70205	CARRH70305	CARRH70405	CARRH70505
	7.0	CARRH70207	CARRH70307	CARRH70407	CARRH70507
Non-Hex	5.5	CARRN70205	CARRN70305	CARRN70405	CARRN70505
	7.0	CARRN70207	CARRN70307	CARRN70407	CARRN70507

Angled Abutment

Abutment for manufacturing Cement/Combination-retained type prosthesis
Various types of Angle (15° & 25°)
Select specification fits for fixture connection.
Fixture Level Impression
Can be positioned in 12 directions by selecting A or B type
Material: Titanium alloy

Tighten with 1.2 Hex Driver.
Recommended tightening torque: 30Ncm

To order as a set as 'Abutment + Abutment Screw'
: Product Code + S (ex: AARRA40152**S**)

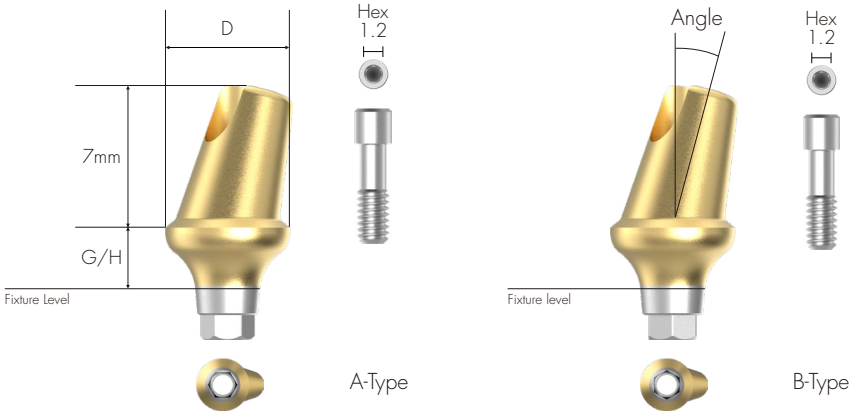

Mini, Regular & Wide

M/R/W
D Ø4.0mm

G/H (mm)	2.0	3.0	4.0	5.0
Angle 15°				
A-Type	AARRA40152	AARRA40153	AARRA40154	AARRA40155
B-Type	AARRB40152	AARRB40153	AARRB40154	AARRB40155

M/R/W
D Ø5.0mm

G/H (mm)	2.0	3.0	4.0	5.0
Angle 15°				
A-Type	AARRA50152	AARRA50153	AARRA50154	AARRA50155
B-Type	AARRB50152	AARRB50153	AARRB50154	AARRB50155

M/R/W

D Ø6.0mm

G/H (mm)	2.0	3.0	4.0	5.0
Angle 15°				
A-Type	AARRA60152	AARRA60153	AARRA60154	AARRA60155
B-Type	AARRB60152	AARRB60153	AARRB60154	AARRB60155

M/R/W

D Ø7.0mm

G/H (mm)	2.0	3.0	4.0	5.0
Angle 15°				
A-Type	AARRA70152	AARRA70153	AARRA70154	AARRA70155
B-Type	AARRB70152	AARRB70153	AARRB70154	AARRB70155

M/R/W

D Ø4.0mm

G/H (mm)	2.0	3.0	4.0	5.0
Angle 25°				
A-Type	AARRA40252	AARRA40253	AARRA40254	AARRA40255
B-Type	AARRB40252	AARRB40253	AARRB40254	AARRB40255

M/R/W

D Ø5.0mm

G/H (mm)	2.0	3.0	4.0	5.0
Angle 25°				
A-Type	AARRA50252	AARRA50253	AARRA50254	AARRA50255
B-Type	AARRB50252	AARRB50253	AARRB50254	AARRB50255

M/R/W

D Ø6.0mm

G/H (mm)	2.0	3.0	4.0	5.0
Angle 25°				
A-Type	AARRA60252	AARRA60253	AARRA60254	AARRA60255
B-Type	AARRB60252	AARRB60253	AARRB60254	AARRB60255

M/R/W

D Ø7.0mm

G/H (mm)	2.0	3.0	4.0	5.0
Angle 25°				
A-Type	AARRA70252	AARRA70253	AARRA70254	AARRA70255
B-Type	AARRB70252	AARRB70253	AARRB70254	AARRB70255

FreeMilling Abutment

Abutment for manufacturing Cement/Combination-retained type prosthesis
Used when creating free marginal space for Abutment
Select specification fits for fixture Connection
Customized by grinding (At least 3.0mm of Abutment Length above Fixture Platform needs to be maintained)
Fixture Level Impression
Material: Titanium alloy

Tighten with 1.2 Hex Driver
Recommended tightening torque: 30Ncm

To order as a set as 'Abutment + Abutment Screw'
: Product Code + S (ex: FMARRH40209**S**)

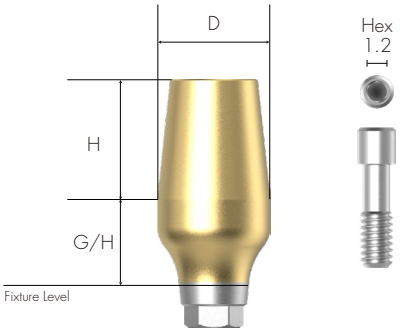

Mini, Regular & Wide

M/R/W
D Ø4.0mm
H 9.0mm

G/H (mm)

2.0	3.0	4.0	5.0
			
Hex	Hex	Hex	Hex
FMARRH40209	FMARRH40309	FMARRH40409	FMARRH40509

M/R/W
D Ø5.0mm
H 8.0mm

G/H (mm)

2.0	3.0	4.0	5.0
			
Hex	Hex	Hex	Hex
FMARRH50208	FMARRH50308	FMARRH50408	FMARRH50508

M/R/W

D Ø6.0mm

H 8.0mm

G/H (mm)	2.0	3.0	4.0	5.0
				
	Hex	Hex	Hex	Hex
	FMARRH60208	FMARRH60308	FMARRH60408	FMARRH60508

M/R/W

D Ø7.0mm

H 8.0mm

G/H (mm)	2.0	3.0	4.0	5.0
				
	Hex	Hex	Hex	Hex
	FMARRH70208	FMARRH70308	FMARRH70408	FMARRH70508

CCM Cast Abutment

Abutment for manufacturing customized abutment in difficult and complicated cases
Select specification fits for fixture connection
Fixture Level Impression
Casting with non-precious alloy for manufacturing customized prosthesis
Melting point of CCM : 1,400 ~ 1,550ºC
Material: Co-Cr-Mo alloy

Tighten with 1.2 Hex Driver.
Recommended tightening torque: 30Ncm

To order as a set as 'Abutment + Abutment Screw'
: Product Code + S (ex: CCARRH4010**S**)

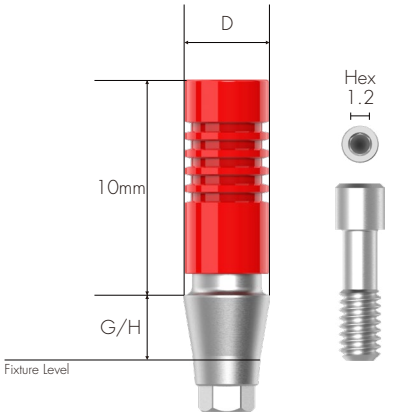

Mini, Regular & Wide

M/R/W

D Ø4.0mm

G/H (mm)

1.0	1.0	3.0	3.0
			
Hex	Non-Hex	Hex	Non-Hex
CCARRH4010	CCARRN4010	CCARRH4030	CCARRN4030

Pick-up Impression Coping

Components for Fixture Level Impression
Open Tray Type
Select specification fits for fixture connection
Enables accurate impression with design of stably fixed in impression material
Material: Titanium alloy

Tighten with 1.2 Hex Driver by hand

To order as a set as 'Impression Coping body + Guide Pin'
: [For 11mm Length] Product Code + S (ex: PIRRH40S**S**)
[For 15mm Length] Product Code + S (ex: PIRRH40L**S**)

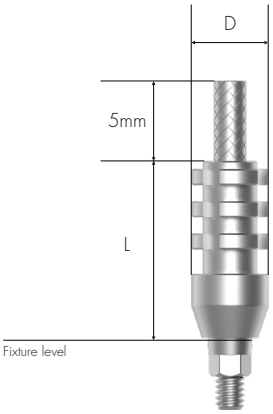

Mini, Regular & Wide

M/R/W

L (mm)	11.0 Hex	11.0 Non-Hex	Guide Pin S
D (mm)			
Ø3.8	PIRRH40S	PIRRN40S	PIGPRRS
Ø4.8	PIRRH50S	PIRRN50S	
Ø5.8	PIRRH60S	PIRRN60S	
Ø6.8	PIRRH70S	PIRRN70S	



D (mm)	Hex	Non-Hex	Guide Pin L
Ø3.8	PIRRH40L	PIRRN40L	PIGPRRL
Ø4.8	PIRRH50L	PIRRN50L	
Ø5.8	PIRRH60L	PIRRN60L	
Ø6.8	PIRRH70L	PIRRN70L	

M/R/W

Transfer Impression Coping

Components for Fixture Level Impression
Closed Tray Type
Select specification fits for fixture connection
Streamlined Shape: Easy to transfer
Anti-Rotation Grooves accord with Hex of fixture
Material: Titanium alloy

Tighten with 1.2 Hex Driver by hand

To order as a set as 'Impression Coping body + Guide Pin'
: [For 9mm Length] Product Code + S (ex: TIRRH40S**S**)
[For 13mm Length] Product Code + S (ex: TIRRH40L**S**)

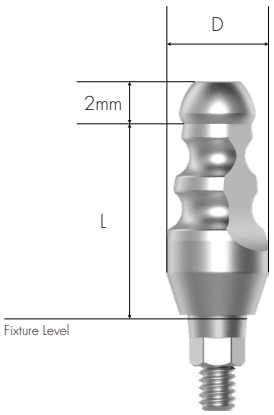

Mini, Regular & Wide

M/R/W

L (mm) / D (mm)	9.0 Hex	9.0 Non-Hex	Guide Pin S
Ø3.8	TIRRH40S	TIRRN40S	TIGPRRS
Ø4.8	TIRRH50S	TIRRN50S	
Ø5.8	TIRRH60S	TIRRN60S	
Ø6.8	TIRRH70S	TIRRN70S	







L (mm) / D (mm)	Hex	Non-Hex	Guide Pin L
Ø3.8	TIRRH40L	TIRRN40L	TIGPRRL
Ø4.8	TIRRH50L	TIRRN50L	
Ø5.8	TIRRH60L	TIRRN60L	
Ø6.8	TIRRH70L	TIRRN70L	

15.0

M/R/W

Fixture Lab Analog

Lab Analog for Fixture Level Impression
Select between Fixture Diameter (Ø 3.5 / Ø 4.0 and above)
Material: Titanium alloy



M
D Ø3.75mm


FLARR350

R/W
D Ø4.25mm


FLARR400

IZEN
IMPLANT

Prosthetic Flow Chart II



Multi Temporary Cylinder

49 p



Multi CCM Cast Cylinder

49 p



Multi Plastic Cast Cylinder

50 p



Multi Ti Link Cylinder

50 p



Multi Lab Analog

52 p



Multi Pick-up Impression Coping

51 p



Multi Transfer Impression Coping

51 p



Multi Straight Abutment Driver

53 p



Multi Straight Abutment

47 p



Multi Angled Abutment

48 p



Multi Healing Cap

52 p



1.2 Hex Driver

132 p



Cover Screw

27 p



Healing Abutment

28 p



1.2 Hex Driver

132 p



ZENEX MULTI Fixture

24 p

Multi Straight Abutment

Abutment for manufacturing screw-retained prosthesis in Multiple Case
Same platform as Multi Angled Abutment
Move into internal oral part by using exclusive Multi Straight Abutment Carrier (Code: MSACR48)
Material: Titanium alloy

Tighten with exclusive Multi Straight Abutment Driver (Code: MSADSR20, Material: POM)
Recommended tightening torque: 30Ncm

To order as a set as 'Abutment + Carrier'
: Product Code + S (ex: MSARR4815**S**)

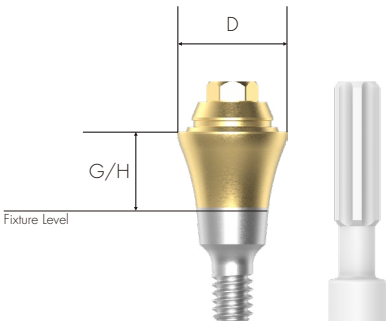

Mini, Regular & Wide

M/R/W

D Ø4.8mm

G/H (mm)

1.5	2.5	3.5	4.5
			
MSARR4815	MSARR4825	MSARR4835	MSARR4845

Multi Angled Abutment

Abutment for manufacturing screw-retained prosthesis in Multiple Case
Abutment of various angles (17°, 30°) for various angled of implant insertion path
Same platform as Multi Straight Abutment
Compensation of fixture placement angle up to 108°
Connect by using exclusive Multi Angled Abutment Carrier (Code: MAACRMC)
Material: Titanium alloy

Tighten with 1.2 Hex Driver
Recommended tightening torque: 30Ncm
Multi Angled Abutment Screw (MAASRR20) included

To order as a set as 'Abutment + Screw + Carrier'
: Product Code + S (ex: MAARRH481725**S**)

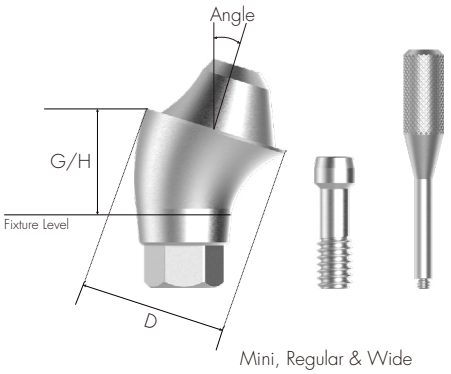

Mini, Regular & Wide

M/R/W
D Ø4.8mm

G/H (mm)	2.5	3.5	4.5
Angle 17°			
Hex	MAARRH481725	MAARRH481735	MAARRH481745
Non-Hex	MAARRN481725	MAARRN481735	MAARRN481745

M/R/W
D Ø4.8mm

G/H (mm)	3.5	4.5
Angle 30°		
Hex	MAARRH483035	MAARRH483045
Non-Hex	MAARRN483035	MAARRN483045

Multi Temporary Cylinder

Multi Cylinder for making Combination-retained prosthesis from Multi Abutment
For manufacturing Screw-retained temporary Abutment
Material: Titanium alloy

Tighten with 1.2 Hex Driver
Recommended tightening torque: 20Ncm
Multi Cylinder Screw (MTCSR23) included

To order as a set as 'Cylinder + Multi Cylinder Screw'
: Product Code + S (ex: MTCSRN48**S**)

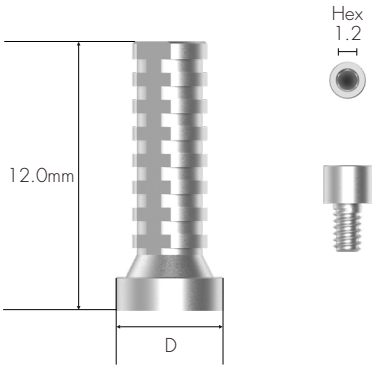

D ∅4.8mm

MTCSRN48

Multi CCM Cast Cylinder

Multi Cylinder for making Screw-retained prosthesis from Multi Abutment
Casting with non-precious alloy for manufacturing customized prosthesis
Melting point of CCM : 1,400 ~ 1,550°C
Material: Co-Cr-Mo alloy

Tighten with 1.2 Hex Driver
Recommended tightening torque: 20Ncm
Multi Cylinder Screw (MTCSR23, Material: Titanium alloy) included

To order as a set as 'Cylinder + Multi Cylinder Screw'
: Product Code + S (ex: MCCCSRN48**S**)

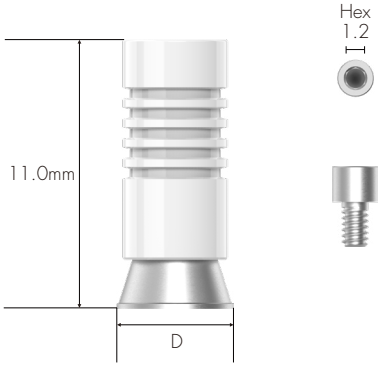

D ∅4.8mm

MCCCSRN48

Multi Plastic Cast Cylinder

Multi Cylinder for making Screw-retained prosthesis from Multi Abutment
Material: POM

Tighten with 1.2 Hex Driver
Recommended tightening torque: 20Ncm
Multi Cylinder Screw (MTCSR23, Material: Titanium alloy) included

To order as a set as 'Cylinder + Multi Cylinder Screw'
: Product Code + S (ex: MPCCSRN48**S**)

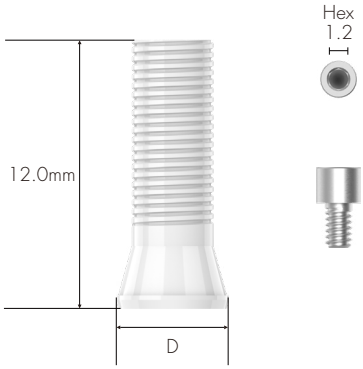

D ∅5.0mm

MPCCSRN48

Multi Ti Link Cylinder

Multi Cylinder for making Combination-retained prosthesis from Multi Abutment
Use when producing Customized Abutment (Titanium & Zirconia) and Crown by CAD/CAM equipment
Use exclusive implant library of ZENEX MULTI Implant System
Abutment Level Impression
Material: Titanium alloy

Tighten with 1.2 Hex Driver
Recommended tightening torque: 20Ncm
Multi Cylinder Screw (MTCSR23) included

To order as a set as 'Cylinder + Multi Cylinder Screw'
: Product Code + S (ex: MTLCSRN48**S**)

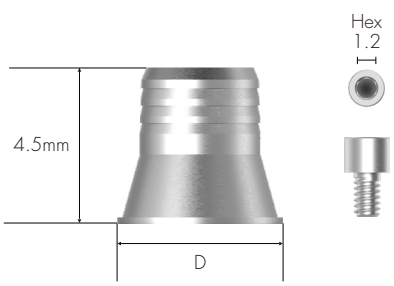

D ∅4.8mm

MTLCSRN48

Multi Pick-up Impression Coping

Components for taking Abutment Level impression for Multi Abutment
Open Tray Type
Material: Titanium alloy

Tighten with 1.2 Hex Driver by hand
Multi Pick-up Impression Coping Guide Pin (MPICSRGP) included

To order as a set as 'Impression Coping body + Guide Pin'
: Product Code + S (ex: MPICSR48S)

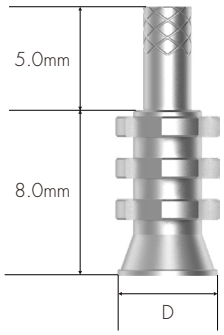

D ∅4.8mm

MPICSR48

Multi Transfer Impression Coping

Components for taking Abutment Level impression for Multi Abutment
Closed Tray Type
Material: Titanium alloy

Tighten with 1.2 Hex Driver by hand

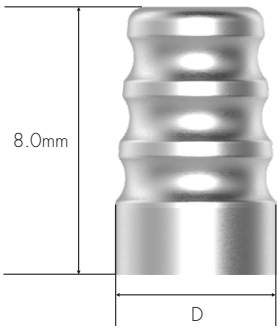

D ∅4.8mm

MTICSR48

Multi Lab Analog

Lab Analog for Multi Abutment
Material: Titanium alloy



MLASR48

Multi Healing Cap

Protect Cap for Multi Abutment
Material: Titanium alloy

Tighten with 1.2 Hex Driver by hand



D ∅4.8mm

MHCSR48

Multi ScanBody

ScanBody for Multi Abutment

ScanBody for manufacturing customized Titanium abutment
Use for Oral scan (Model scan available as well)
Material: Titanium alloy

Tighten with 1.2 Hex Driver by hand

To order as a set as 'ScanBody + ScanBody Screw'
: Product Code + S (ex: MSBSR4809S)

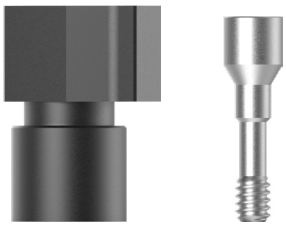

MSBSR4809

Multi Straight Abutment Driver

Torque driver for Multi Straight Abutment
Material: Stainless Steel (TrimRite®)



MSADSR20

Prosthetic Flow Chart III



61 p



Metal Housing White Spacer

61 p



Kerator Lab Analog

63 p



Kerator Impression Coping

63 p



Magic Tool

182 p



Ball Abutment Cap

56 p



Ball Abutment Retainer

56 p



Ball Abutment Lab Analog

057 p



Ball Abutment Driver

58 p



Ball Abutment

55 p



Kerator Torque Tip

62 p



Kerator Abutment

59 p



Kerator Angled Abutment

60 p



1.2 Hex Driver

132 p



Cover Screw

27 p



Healing Abutment

28 p



1.2 Hex Driver

132 p



ZENEX MULTI Fixture

24 p

Ball Abutment

Abutment for overdenture using O-ring attachment
Compensation of mounting angle up to 20°
Material: Titanium alloy

Tighten with exclusive Ball Abutment Driver (Code: BAD24)
Recommended tightening torque: 30Ncm

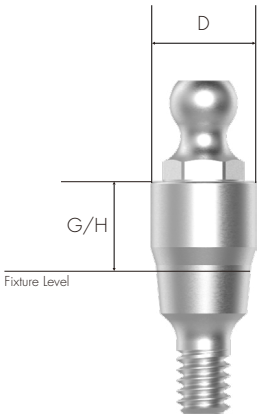

Mini, Regular & Wide

M/R/W

D Ø3.5mm

G/H (mm)

1.0	2.0	3.0	4.0	5.0	6.0
					
BARR3510	BARR3520	BARR3530	BARR3540	BARR3550	BARR3560

Ball Abutment Cap Set

O-ring attachment for Ball Abutment
Replace O-ring on Ball Abutment Cap
Packing Unit: Ball Abutment Cap (Material: Titanium alloy)+Ball Abutment Lab O-ring (Material: Silicone)

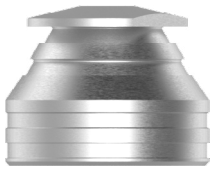

BASRCS

Ball Abutment Retainer Set

Use in case lack of vertical diameter comparing to Ball Abutment Retainer
Packing Unit: Ball Abutment Retainer (Material: Titanium alloy)+Ball Abutment Lab O-ring (Material: Silicone)

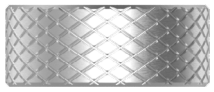

BASRRS

Ball Abutment O-ring Set

O-ring set
Packing Unit: Ball Abutment O-ring 5 EA
Material: Silicone



BASROS

Ball Abutment Lab Analog

Lab Analog for Ball Abutment
Material: Titanium alloy



BAALA

Ball Abutment Driver

Torque driver for Ball Abutment
Material: Stainless Steel (TrimRite®)+Titanium alloy+Silicone



BAD24

Kerator Abutment

Compensation of fixture placement angle up to 40°
1.5mm lower vertical dimension
Composition of multiple attachments with stable retention

Connect with exclusive driver
Recommended tightening torque: 30Ncm

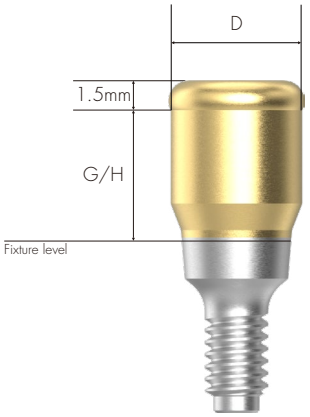

Mini, Regular & Wide

M/R/W

D Ø3.7mm

G/H (mm)

1.0	2.0	3.0	4.0	5.0	6.0
AR401	AR402	AR403	AR404	AR405	AR406

Kerator Angled Abutment

1.5mm lower vertical dimension
Composition of multiple attachments with stable retention

Connect with 1.2 Hex driver
Recommended tightening torque: 30Ncm

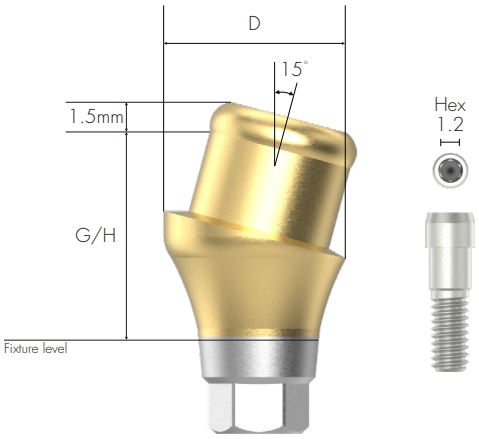

Mini, Regular & Wide

M/R/W

D Ø3.7mm

G/H (mm)

1.5	3.0
	
AR4AN1.5	AR4AN3.0

Kerator CDPH Set

Composition: White spacer / denture cap connected black processing male & Replacement male (Red, Blue & Pink)
Select replacement male of adequate retention to use according to cases
Replace replacement male by using Kerator Magic tool



CDPH SET

Kerator Male Cap

Retention power of KERATOR male cap is down (up to 20%) and red cap(angle) is included in the male package
Colors of cap determine retention power and it minimizes Denture Repair even there is any continuous bone loss

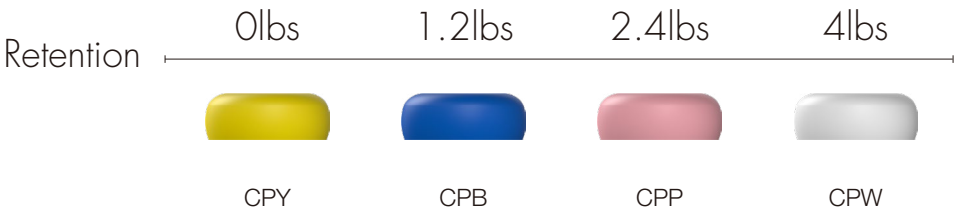

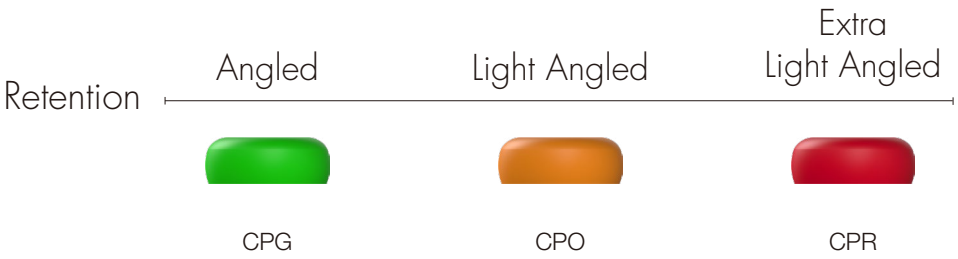

Kerator Magic Tool

Use to connect and remove replacement male on denture cap
As separated into two pieces, it is easy for maintenance



KMH002

Kerator Torque Tip

Torque driver for Kerator Abutment

Round Type



KMD719

Kerator Impression Coping

Pick-up Impression Coping for Kerator abutment
Closed Tray Type



DKI4845

Kerator Lab Analog

Lab Analog for Kerator Abutment



DKA3854

Prosthetic Flow Chart IV



Ti Link Abutment

66 p



Ti Blank Abutment

67 p



Fixture Lab Analog

44 p



Pick-up Impression Coping

40 p



Transfer Impression Coping

42 p



Cover Screw

27 p



Healing Abutment

28 p



1.2 Hex Driver

132 p



ZENEX MULTI Fixture

24 p

ScanBody

ScanBody for manufacturing customized Titanium abutment
Use for Oral scan (Model scan available as well)
Material: Titanium alloy

Tighten with 1.2 Hex Driver by hand

To order as a set as 'ScanBody + ScanBody Screw'
: Product Code + S (ex: RSBR4310**S**)

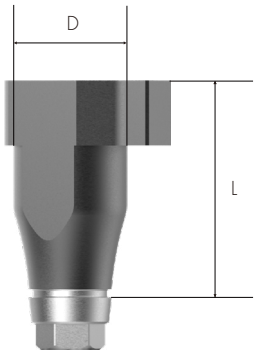

M/R/W

D ∅4.3mm
L 10.0mm



RSBR4310

Ti Link Abutment

Abutment for manufacturing Cement/Combination-retained type prosthesis
For manufacturing custom abutment (Titanium & Zirconia) and crown by CAD/CAM equipment
Select specification fits for fixture Connection
Use exclusive library for ZENEX MULTI Implant system
Fixture Level Impression
Material: Titanium alloy

Tighten with 1.2 Hex Driver
Recommended tightening torque: 30Ncm

To order as a set as 'Abutment + Screw'
: Product Code + S (ex: TLARRH4010**S**)

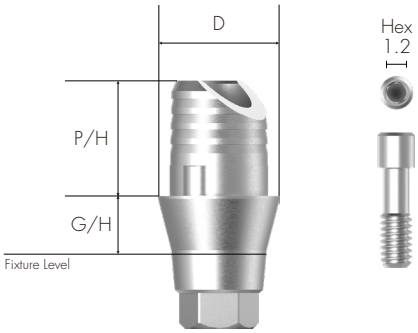

Mini, Regular & Wide

M/R/W

D Ø4.0mm

G/H (mm)	1.0		2.0	
P/H (mm)	3.8			
				
	Hex	Non-Hex	Hex	Non-Hex
	TLARRH4010	TLARRN4010	TLARRH4020	TLARRN4020

Ti Blank Abutment

Manufacturing customized abutment with milling machine
Select specification fits for fixture Connection
Digital Impression
Material: Titanium alloy

Tighten with 1.2 Hex Driver
Recommended tightening torque: 30Ncm
Product line-up applied for various milling machine brands
(Milling machine manufacturer: Arum(Doowon), Manix, Vatech, RND)

To order as a set as 'Abutment + Screw'
: Product Code + S (ex: TBARRH10A**S**)

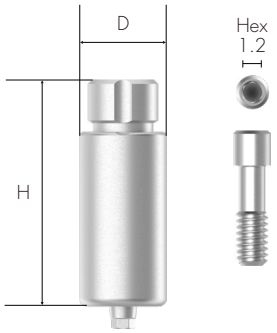

Mini, Regular & Wide

For Arum

M/R/W

D ∅10.0mm

H (mm) — 20



Hex	Non-Hex
TBARRH10A	TBARRN10A

For Manix

M/R/W

D ∅10.0mm

H (mm) — 20



Hex	Non-Hex
TBARRH10M	TBARRN10M

IZEN
IMPLANT

ZENEX PLUS
R-System

ZENEX PLUS R-System

COMPOSITION

074 ZENEX PLUS R-System Fixture
076 Cover Screw
077 Healing Abutment
080 Prosthetic Flow Chart I
081 Temporary Abutment
082 Cemented Abutment
084 Angled Abutment
087 FreeMilling Abutment
089 CCM Cast Abutment
090 Pick-up Impression Coping
092 Transfer Impression Coping
094 Fixture Lab Analog
096 Prosthetic Flow Chart II
097 Multi Straight Abutment
098 Multi Angled Abutment
099 Components of Multi Abutment
104 Prosthetic Flow Chart III
105 Ball Abutment
106 Components of Ball Abutment
109 Kerator Abutment
110 Kerator Angled Abutment
111 Components of Kerator Abutment
114 Prosthetic Flow Chart IV
115 ScanBody
116 Ti Link Abutment
117 Ti Blank Abutment

ZENEX PLUS R-System

- Design features

- Designed for various types of bone



Post shape (Rounded top) optimized for digital dentistry system
Wide cross-section to prevent crown rotation and secure accurate placement.
Wide marginal area to prevent crown fracture
Small screw guide hole to secure strength of abutment
Optimized abutment screw for Short Fixture



5° tapered connection to secure strong fixation
Internal screw for
easy tightening and separation of abutment



Platform Switching
Prevents crestal bone loss after implant placement
and provides esthetic result

Deep screw hole to secure initial stability on weak bone
Reversed taper design on upper part to minimize stress on
bone at implant placement
Micro Groove design to minimize bone loss and appreciate esthetic of prosthesis
1.0 Pitch double thread helps to reduce time for implant placement

ZENEX PLUS Implant
- Surface features

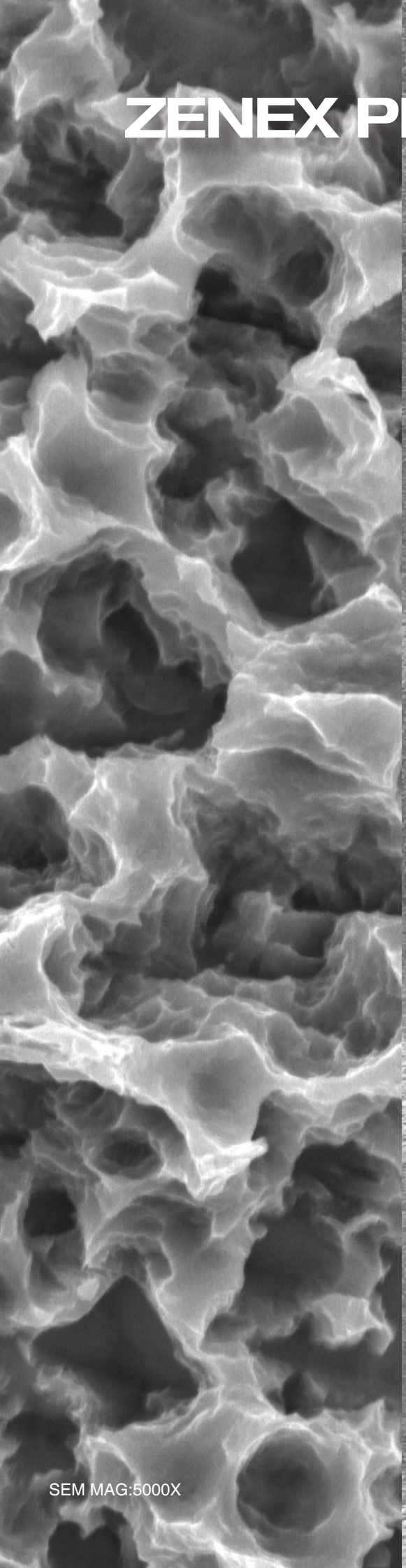

SEM MAG:5000X

SEM MAG:30X

SLA surface
($Al_2 O_3$ powder Sand-blast and Acid Etched)

- SLA surface for presenting ideal surface shape
- Surface Roughness Ra 2.0~3.0㎛

- Safe surface with no residual acid
- Safer than other implants (Proved by ICP/IC Analysis)

ZENEX PLUS Fixture R - System

Reversed taper design on upper part to minimize stress on bone when an implant is placed.
SLA surface implant
Micro Groove design to minimize bone loss and appreciate esthetic of prosthesis
Deep screw hole to secure initial stability on weak bone
Recommended torque for implant placement: Less than 30~45Ncm
Material: Titanium

* Recommend to use fixture bigger than Ø4.5 mm for single case in posterior area

To order as a set as 'Fixture + Cover Screw'
: Product Code + S (ex: ZPRM3508S)



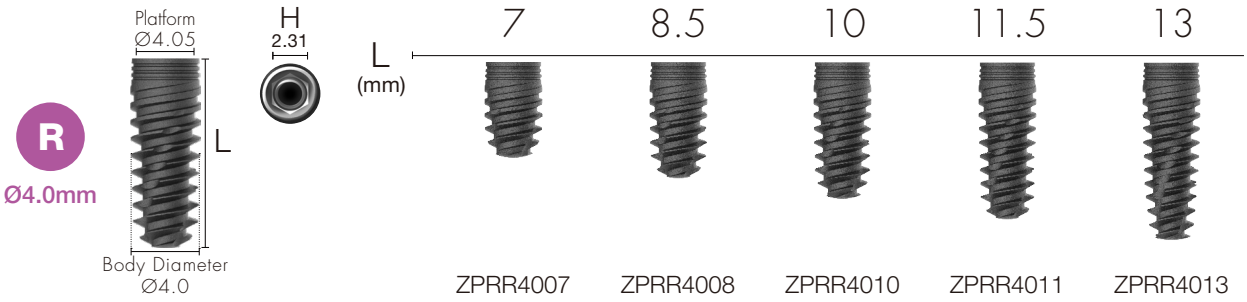



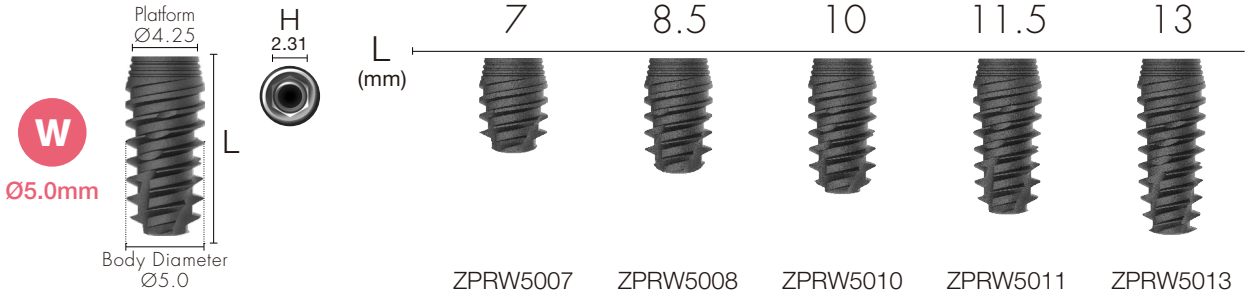

Nominal diameter may differ from actual diameter

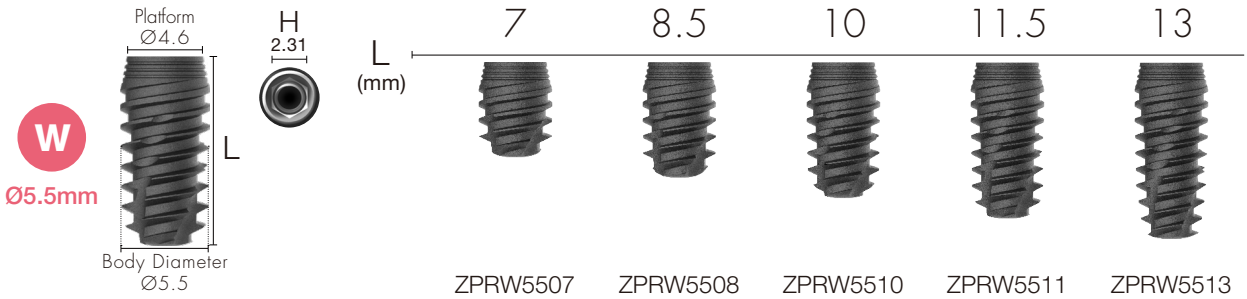

Nominal diameter may differ from actual diameter

Special Options

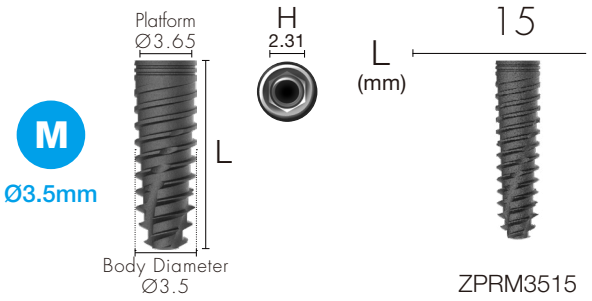

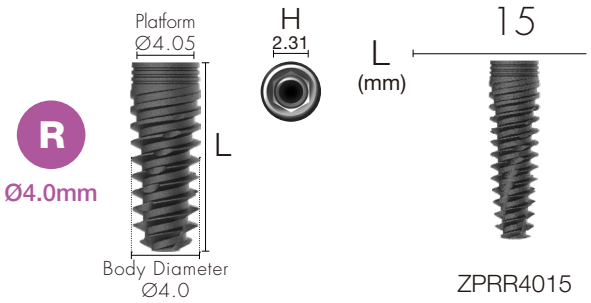

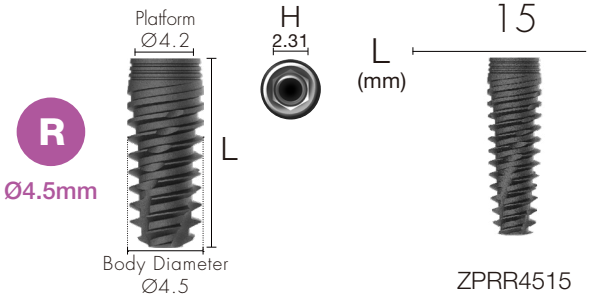

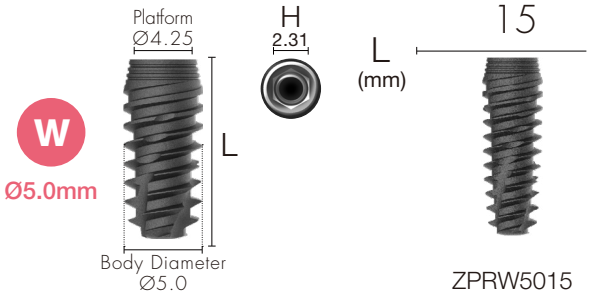

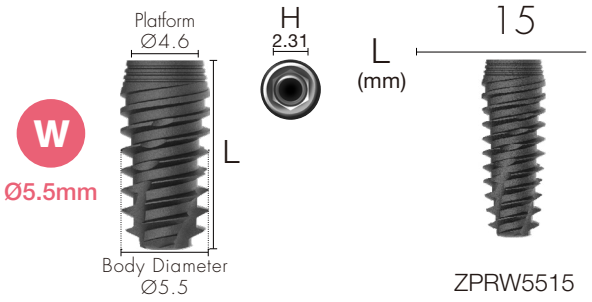

Cover Screw

Select appropriate fixture height upon depth of implant placement.
Select specification fits for fixture connection.
Material: Titanium alloy

Tighten with 1.2 Hex Driver by hand.
Recommended tightening torque: 5~8Ncm

M/R/W



Nominal diameter may differ from actual diameter

Healing Abutment

Use Healing Abutment fits for the diameter of abutment.
Use specification fits for fixture connection.
Material: Titanium alloy

Tighten with 1.2 Hex Driver by hand.
Recommended tightening torque: 5~8Ncm

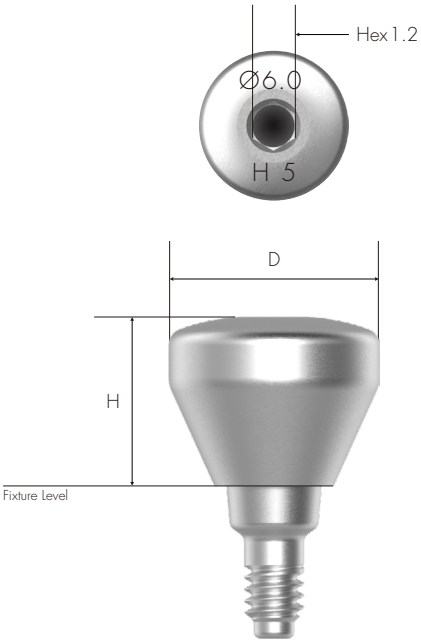

Mini, Regular & Wide

M/R/W

D (mm) \ H (mm)	3.0	4.0	5.0
Ø4.0	HARR403	HARR404	HARR405
Ø5.0	HARR503	HARR504	HARR505
Ø6.0	HARR603	HARR604	HARR605
Ø7.0	HARR703	HARR704	HARR705
Ø8.0	HARR803	HARR804	HARR805
Ø9.0	HARR903	HARR904	HARR905

M/R/W

H (mm) / D (mm)	6.0	7.0	9.0
			
∅4.0	HARR406	HARR407	HARR409
∅5.0	HARR506	HARR507	HARR509
∅6.0	HARR606	HARR607	HARR609
∅7.0	HARR706	HARR707	HARR709
∅8.0	HARR806	HARR807	

IZEN
IMPLANT

Prosthetic Flow Chart I



Temporary Abutment

81 p

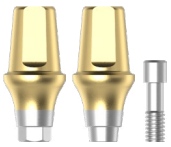

Cemented Abutment

82 p

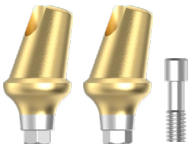

Angled Abutment

84 p



FreeMilling Abutment

87 p



CCM Cast Abutment

89 p



Fixture Lab Analog

94 p



Pick-up Impression Coping

90 p



Transfer Impression Coping

92 p



Cover Screw

76 p



Healing Abutment

77 p



1.2 Hex Driver

132 p



ZENEX PLUS Fixture

74 p

Temporary Abutment

Abutment for manufacturing Screw-retained type temporary prosthesis
Select specification fits for fixture connection
Fixture Level Impression
Material: Titanium alloy

Tighten with 1.2 Hex Driver.
Recommended tightening torque: 20Ncm

To order as a set as 'Abutment + Abutment Screw'
: Product Code + S (ex: TARRH4010S)

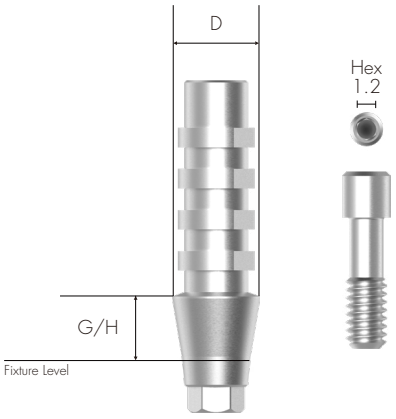

Mini, Regular & Wide

M/R/W

D ∅4.0mm

G/H (mm)

1.0		3.0	
			
Hex	Non-Hex	Hex	Non-Hex
TARRH4010	TARRN4010	TARRH4030	TARRN4030

Cemented Abutment

Abutment for manufacturing Cement/Combination-retained type prosthesis
Select specification fits for fixture connection
Customized by grinding (At least 3.0mm of Abutment Length above Fixture Platform needs to be maintained)
Fixture Level Impression
Material: Titanium alloy

Tighten with 1.2 Hex Driver.
Recommended tightening torque: 30Ncm

To order as a set as 'Abutment + Abutment Screw'
: Product Code + S (ex: CARRH40205**S**)

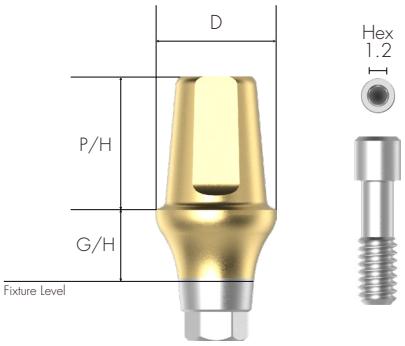

Mini, Regular & Wide

M/R/W
D ∅4.0mm

	G/H (mm)	2.0	3.0	4.0	5.0
					
	P/H (mm)				
Hex	5.5	CARRH40205	CARRH40305	CARRH40405	CARRH40505
	7.0	CARRH40207	CARRH40307	CARRH40407	CARRH40507
Non-Hex	5.5	CARRN40205	CARRN40305	CARRN40405	CARRN40505
	7.0	CARRN40207	CARRN40307	CARRN40407	CARRN40507

M/R/W
D ∅5.0mm

	G/H (mm)	2.0	3.0	4.0	5.0
					
	P/H (mm)				
Hex	5.5	CARRH50205	CARRH50305	CARRH50405	CARRH50505
	7.0	CARRH50207	CARRH50307	CARRH50407	CARRH50507
Non-Hex	5.5	CARRN50205	CARRN50305	CARRN50405	CARRN50505
	7.0	CARRN50207	CARRN50307	CARRN50407	CARRN50507

M/R/W

D Ø6.0mm

	G/H (mm)	2.0	3.0	4.0	5.0
					
	P/H (mm)				
Hex	5.5	CARRH60205	CARRH60305	CARRH60405	CARRH60505
	7.0	CARRH60207	CARRH60307	CARRH60407	CARRH60507
Non-Hex	5.5	CARRN60205	CARRN60305	CARRN60405	CARRN60505
	7.0	CARRN60207	CARRN60307	CARRN60407	CARRN60507

M/R/W

D Ø7.0mm

	G/H (mm)	2.0	3.0	4.0	5.0
					
	P/H (mm)				
Hex	5.5	CARRH70205	CARRH70305	CARRH70405	CARRH70505
	7.0	CARRH70207	CARRH70307	CARRH70407	CARRH70507
Non-Hex	5.5	CARRN70205	CARRN70305	CARRN70405	CARRN70505
	7.0	CARRN70207	CARRN70307	CARRN70407	CARRN70507

Angled Abutment

Abutment for manufacturing Cement/Combination-retained type prosthesis
Various types of Angle (15° & 25°)
Select specification fits for fixture connection.
Fixture Level Impression
Can be positioned in 12 directions by selecting A or B type
Material: Titanium alloy

Tighten with 1.2 Hex Driver.
Recommended tightening torque: 30Ncm

To order as a set as 'Abutment + Abutment Screw'
: Product Code + S (ex: AARRA40152S)

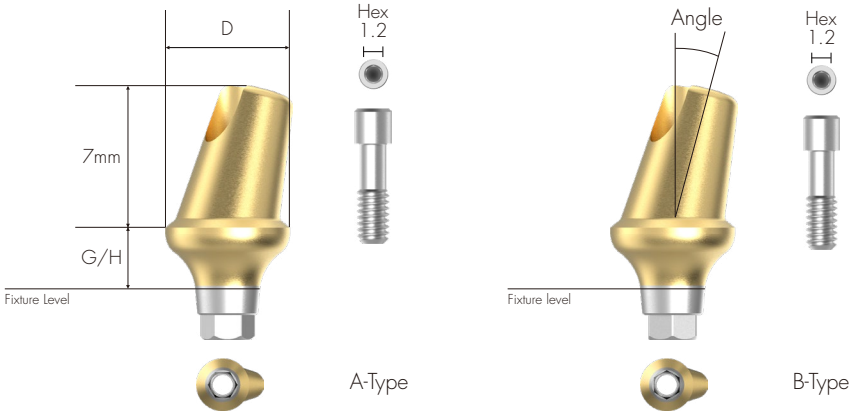

Mini, Regular & Wide

M/R/W

D ∅4.0mm

G/H (mm)	2.0	3.0	4.0	5.0
Angle 15°				
A-Type	AARRA40152	AARRA40153	AARRA40154	AARRA40155
B-Type	AARRB40152	AARRB40153	AARRB40154	AARRB40155

M/R/W

D ∅5.0mm

G/H (mm)	2.0	3.0	4.0	5.0
Angle 15°				
A-Type	AARRA50152	AARRA50153	AARRA50154	AARRA50155
B-Type	AARRB50152	AARRB50153	AARRB50154	AARRB50155

M/R/W

D Ø6.0mm

G/H (mm)	2.0	3.0	4.0	5.0
Angle 15°				
A-Type	AARRA60152	AARRA60153	AARRA60154	AARRA60155
B-Type	AARRB60152	AARRB60153	AARRB60154	AARRB60155

M/R/W

D Ø7.0mm

G/H (mm)	2.0	3.0	4.0	5.0
Angle 15°				
A-Type	AARRA70152	AARRA70153	AARRA70154	AARRA70155
B-Type	AARRB70152	AARRB70153	AARRB70154	AARRB70155

M/R/W

D Ø4.0mm

G/H (mm)	2.0	3.0	4.0	5.0
Angle 25°				
A-Type	AARRA40252	AARRA40253	AARRA40254	AARRA40255
B-Type	AARRB40252	AARRB40253	AARRB40254	AARRB40255

M/R/W

D Ø5.0mm

G/H (mm)	2.0	3.0	4.0	5.0
Angle 25°				
A-Type	AARRA50252	AARRA50253	AARRA50254	AARRA50255
B-Type	AARRB50252	AARRB50253	AARRB50254	AARRB50255

M/R/W

D ∅6.0mm

G/H (mm)	2.0	3.0	4.0	5.0
Angle 25°				
A-Type	AARRA60252	AARRA60253	AARRA60254	AARRA60255
B-Type	AARRB60252	AARRB60253	AARRB60254	AARRB60255

M/R/W

D ∅7.0mm

G/H (mm)	2.0	3.0	4.0	5.0
Angle 25°				
A-Type	AARRA70252	AARRA70253	AARRA70254	AARRA70255
B-Type	AARRB70252	AARRB70253	AARRB70254	AARRB70255

FreeMilling Abutment

Abutment for manufacturing Cement/Combination-retained type prosthesis
Used when creating free marginal space for Abutment
Select specification fits for fixture Connection
Customized by grinding (At least 3.0mm of Abutment Length above Fixture Platform needs to be maintained)
Fixture Level Impression
Material: Titanium alloy

Tighten with 1.2 Hex Driver
Recommended tightening torque: 30Ncm

To order as a set as 'Abutment + Abutment Screw'
: Product Code + S (ex: FMARRH40209**S**)

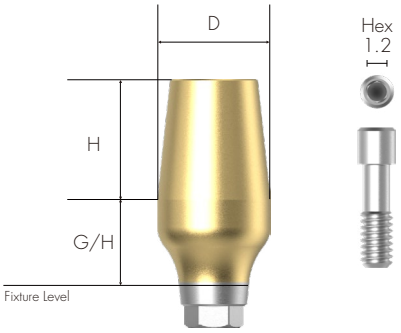

Mini, Regular & Wide

M/R/W
D Ø4.0mm
H 9.0mm

G/H (mm)	2.0	3.0	4.0	5.0
				
	Hex	Hex	Hex	Hex
	FMARRH40209	FMARRH40309	FMARRH40409	FMARRH40509

M/R/W
D Ø5.0mm
H 8.0mm

G/H (mm)	2.0	3.0	4.0	5.0
				
	Hex	Hex	Hex	Hex
	FMARRH50208	FMARRH50308	FMARRH50408	FMARRH50508

M/R/W

D Ø6.0mm

H 8.0mm

G/H (mm)	2.0	3.0	4.0	5.0
				
	Hex	Hex	Hex	Hex
	FMARRH60208	FMARRH60308	FMARRH60408	FMARRH60508

M/R/W

D Ø7.0mm

H 8.0mm

G/H (mm)	2.0	3.0	4.0	5.0
				
	Hex	Hex	Hex	Hex
	FMARRH70208	FMARRH70308	FMARRH70408	FMARRH70508

CCM Cast Abutment

Abutment for manufacturing customized abutment in difficult and complicated cases
Select specification fits for fixture connection
Fixture Level Impression
Casting with non-precious alloy for manufacturing customized prosthesis
Melting point of CCM : 1,400 ~ 1,550ºC
Material: Co-Cr-Mo alloy

Tighten with 1.2 Hex Driver.
Recommended tightening torque: 30Ncm

To order as a set as 'Abutment + Abutment Screw'
: Product Code + S (ex: CCARRH4010S)

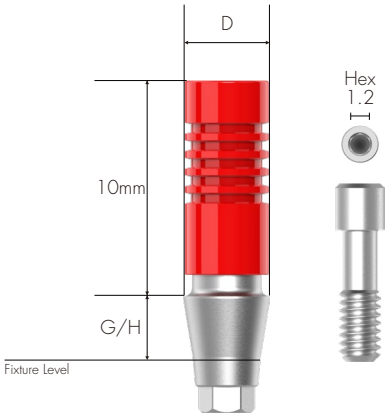

Mini, Regular & Wide

M/R/W

D ∅4.0mm

G/H (mm)

1.0		3.0	
			
Hex	Non-Hex	Hex	Non-Hex
CCARRH4010	CCARRN4010	CCARRH4030	CCARRN4030

Pick-up Impression Coping

Components for Fixture Level Impression
Open Tray Type
Select specification fits for fixture connection
Enables accurate impression with design of stably fixed in impression material
Material: Titanium alloy

Tighten with 1.2 Hex Driver by hand

To order as a set as 'Impression Coping body + Guide Pin'
: [For 11mm Length] Product Code + S (ex: PIRRH40S**S**)
[For 15mm Length] Product Code + S (ex: PIRRH40L**S**)

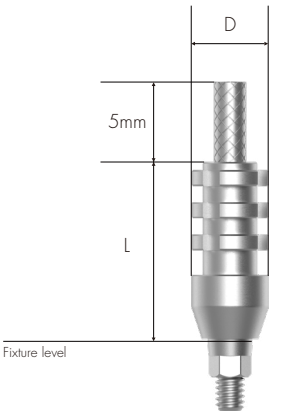

Mini, Regular & Wide

M/R/W

L (mm)	11.0 Hex	11.0 Non-Hex	Guide Pin S
D (mm)			
Ø3.8	PIRRH40S	PIRRN40S	PIGPRRS
Ø4.8	PIRRH50S	PIRRN50S	
Ø5.8	PIRRH60S	PIRRN60S	
Ø6.8	PIRRH70S	PIRRN70S	



D (mm)	Hex	Non-Hex	Guide Pin L
Ø3.8	PIRRH40L	PIRRN40L	
Ø4.8	PIRRH50L	PIRRN50L	PIGPRRL
Ø5.8	PIRRH60L	PIRRN60L	
Ø6.8	PIRRH70L	PIRRN70L	

M/R/W

Transfer Impression Coping

Components for Fixture Level Impression
Closed Tray Type
Select specification fits for fixture connection
Streamlined Shape: Easy to transfer
Anti-Rotation Grooves accord with Hex of fixture
Material: Titanium alloy

Tighten with 1.2 Hex Driver by hand

To order as a set as 'Impression Coping body + Guide Pin'
: [For 9mm Length] Product Code + S (ex: TIRRH40S**S**)
[For 13mm Length] Product Code + S (ex: TIRRH40L**S**)

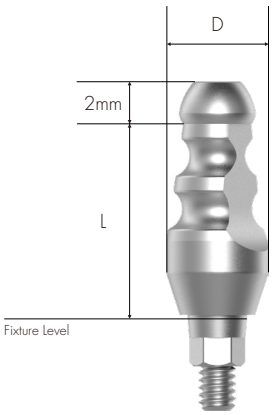

Mini, Regular & Wide

M/R/W

L (mm)	9.0 Hex	9.0 Non-Hex	Guide Pin S
D (mm)			
Ø3.8	TIRRH40S	TIRRN40S	TIGPRRS
Ø4.8	TIRRH50S	TIRRN50S	
Ø5.8	TIRRH60S	TIRRN60S	
Ø6.8	TIRRH70S	TIRRN70S	

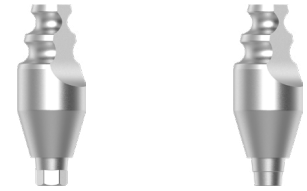



L (mm)	Hex	Non-Hex	Guide Pin L
	15.0		
D (mm)			
Ø3.8	TIRRH40L	TIRRN40L	
Ø4.8	TIRRH50L	TIRRN50L	
Ø5.8	TIRRH60L	TIRRN60L	TIGPRRL
Ø6.8	TIRRH70L	TIRRN70L	

M/R/W

Fixture Lab Analog

Lab Analog for Fixture Level Impression
Select between Fixture Diameter (Ø 3.5 / Ø 4.0 and above)
Material: Titanium alloy



M
D Ø3.75mm


FLARR350

R/W
D Ø4.25mm


FLARR400

IZEN
IMPLANT

Prosthetic Flow Chart II



Multi Temporary Cylinder

99 p



Multi CCM Cast Cylinder

99 p



Multi Plastic Cast Cylinder

100 p



Multi Ti Link Cylinder

100 p



Multi Lab Analog

102 p



Multi Pick-up Impression Coping

101 p



Multi Transfer Impression Coping

101 p



Multi Straight Abutment Driver

103 p



Multi Straight Abutment

97 p



Multi Angled Abutment

98 p



Multi Healing Cap

102 p



1.2 Hex Driver

132 p



Cover Screw

76 p



Healing Abutment

77 p



1.2 Hex Driver

132 p



ZENEX PLUS Fixture

74 p

Multi Straight Abutment

Abutment for manufacturing screw-retained prosthesis in Multiple Case
Same platform as Multi Angled Abutment
Move into internal oral part by using exclusive Multi Straight Abutment Carrier (Code: MSACR48)
Material: Titanium alloy

Tighten with exclusive Multi Straight Abutment Driver (Code: MSADSR20, Material: POM)
Recommended tightening torque: 30Ncm

To order as a set as 'Abutment + Carrier'
: Product Code + S (ex: MSARR4815**S**)

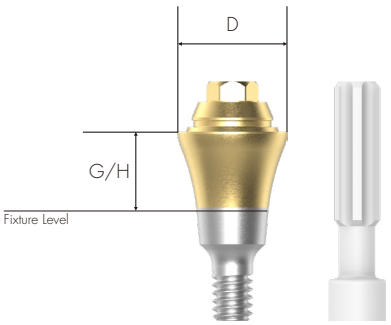

Mini, Regular & Wide

M/R/W

D Ø4.8mm

G/H (mm)

1.5	2.5	3.5	4.5
MSARR4815	MSARR4825	MSARR4835	MSARR4845

Multi Angled Abutment

Abutment for manufacturing screw-retained prosthesis in Multiple Case
Abutment of various angles (17°, 30°) for various angled of implant insertion path
Same platform as Multi Straight Abutment
Compensation of fixture placement angle up to 108°
Connect by using exclusive Multi Angled Abutment Carrier (Code: MAACRMC)
Material: Titanium alloy

Tighten with 1.2 Hex Driver
Recommended tightening torque: 30Ncm
Multi Angled Abutment Screw (MAASRR20) included

To order as a set as 'Abutment + Screw + Carrier'
: Product Code + S (ex: MAARRH481725**S**)

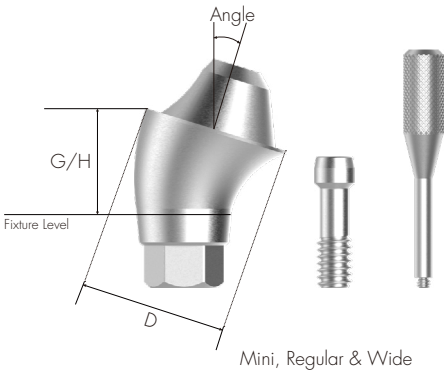

Mini, Regular & Wide

M/R/W
D ∅4.8mm

G/H (mm)	2.5	3.5	4.5
Angle 17°			
Hex	MAARRH481725	MAARRH481735	MAARRH481745
Non-Hex	MAARRN481725	MAARRN481735	MAARRN481745

M/R/W
D ∅4.8mm

G/H (mm)	3.5	4.5
Angle 30°		
Hex	MAARRH483035	MAARRH483045
Non-Hex	MAARRN483035	MAARRN483045

Multi Temporary Cylinder

Multi Cylinder for making Combination-retained prosthesis from Multi Abutment
For manufacturing Screw-retained temporary Abutment
Material: Titanium alloy

Tighten with 1.2 Hex Driver
Recommended tightening torque: 20Ncm
Multi Cylinder Screw (MTCSR23) included

To order as a set as 'Cylinder + Multi Cylinder Screw'
: Product Code + S (ex: MTCSRN48S)

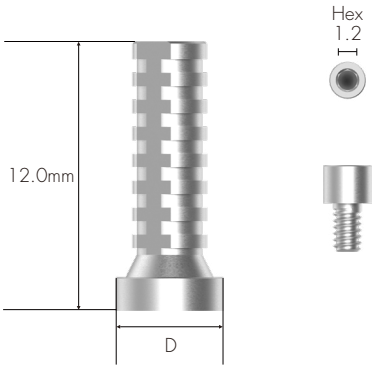

D ∅4.8mm

MTCSRN48

Multi CCM Cast Cylinder

Multi Cylinder for making Screw-retained prosthesis from Multi Abutment
Casting with non-precious alloy for manufacturing customized prosthesis
Melting point of CCM : 1,400 ~ 1,550°C
Material: Co-Cr-Mo alloy

Tighten with 1.2 Hex Driver
Recommended tightening torque: 20Ncm
Multi Cylinder Screw (MTCSR23, Material: Titanium alloy) included

To order as a set as 'Cylinder + Multi Cylinder Screw'
: Product Code + S (ex: MCCCSRN48S)

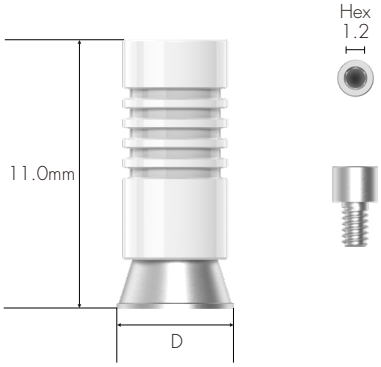

D ∅4.8mm

MCCCSRN48

Multi Plastic Cast Cylinder

Multi Cylinder for making Screw-retained prosthesis from Multi Abutment
Material: POM

Tighten with 1.2 Hex Driver
Recommended tightening torque: 20Ncm
Multi Cylinder Screw (MTCSR23, Material: Titanium alloy) included

To order as a set as 'Cylinder + Multi Cylinder Screw'
: Product Code + S (ex: MPCCSRN48S)

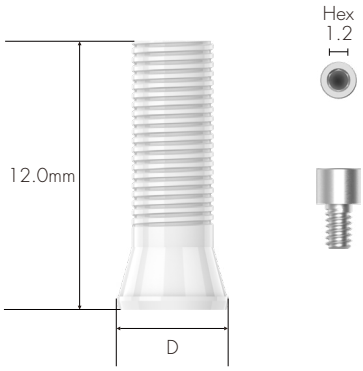

D ∅5.0mm

MPCCSRN48

Multi Ti Link Cylinder

Multi Cylinder for making Combination-retained prosthesis from Multi Abutment
Use when producing Customized Abutment (Titanium & Zirconia) and Crown by CAD/CAM equipment
Use exclusive implant library of ZENEX PLUS Implant System
Abutment Level Impression
Material: Titanium alloy

Tighten with 1.2 Hex Driver
Recommended tightening torque: 20Ncm
Multi Cylinder Screw (MTCSR23) included

To order as a set as 'Cylinder + Multi Cylinder Screw'
: Product Code + S (ex: MTLCSRN48S)

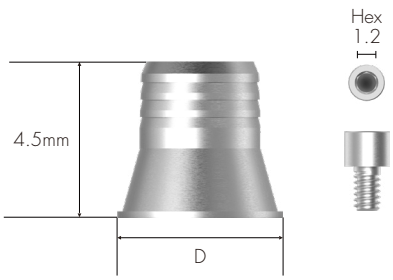

D ∅4.8mm

MTLCSRN48

Multi Pick-up Impression Coping

Components for taking Abutment Level impression for Multi Abutment
Open Tray Type
Material: Titanium alloy

Tighten with 1.2 Hex Driver by hand
Multi Pick-up Impression Coping Guide Pin (MPICSRGP) included

To order as a set as 'Impression Coping body + Guide Pin'
: Product Code + S (ex: MPICSR48S)

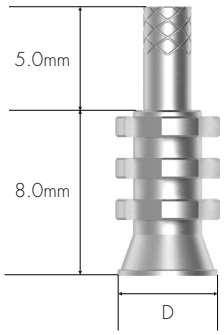

D ∅4.8mm

MPICSR48

Multi Transfer Impression Coping

Components for taking Abutment Level impression for Multi Abutment
Closed Tray Type
Material: Titanium alloy

Tighten with 1.2 Hex Driver by hand

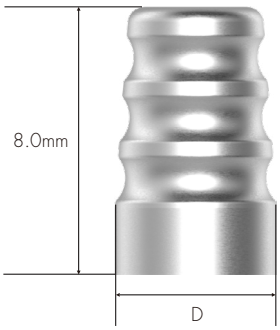

D ∅4.8mm

MTICSR48

Multi Lab Analog

Lab Analog for Multi Abutment
Material: Titanium alloy



MLASR48

Multi Healing Cap

Protect Cap for Multi Abutment
Material: Titanium alloy

Tighten with 1.2 Hex Driver by hand



D ∅4.8mm

MHCSR48

Multi ScanBody

ScanBody for Multi Abutment

ScanBody for manufacturing customized Titanium abutment
Use for Oral scan (Model scan available as well)
Material: Titanium alloy

Tighten with 1.2 Hex Driver by hand

To order as a set as 'ScanBody + ScanBody Screw'
: Product Code + S (ex: MSBSR4809S)

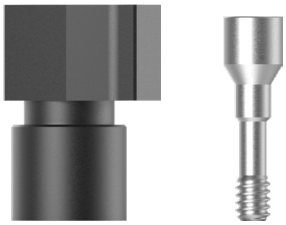

MSBSR4809

Multi Straight Abutment Driver

Torque driver for Multi Straight Abutment
Material: Stainless Steel (TrimRite®)



MSADSR20

Prosthetic Flow Chart III



111 p



Metal Housing



White Spacer

111 p



Kerator Lab Analog

113 p



Kerator Impression Coping

113 p



Magic Tool

112 p



Ball Abutment Cap

106 p



Ball Abutment Retainer

106 p



Ball Abutment Lab Analog

107 p



Ball Abutment Driver

108 p



Ball Abutment

105 p



Kerator Torque Tip

112 p



Kerator Abutment

109 p



Kerator Angled Abutment

110 p



1.2 Hex Driver

132 p



Cover Screw

76 p



Healing Abutment

77 p



1.2 Hex Driver

132 p



ZENEX PLUS Fixture

74 p

Ball Abutment

Abutment for overdenture using O-ring attachment
Compensation of mounting angle up to 20°
Material: Titanium alloy

Tighten with exclusive Ball Abutment Driver (Code: BAD24)
Recommended tightening torque: 30Ncm

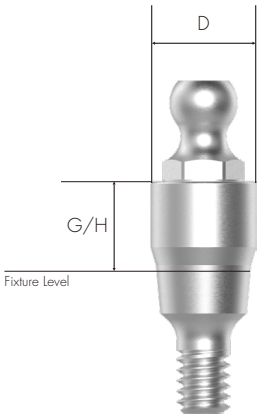

Mini, Regular & Wide

M/R/W

D Ø3.5mm

G/H (mm)

1.0	2.0	3.0	4.0	5.0	6.0
					
BARR3510	BARR3520	BARR3530	BARR3540	BARR3550	BARR3560

Ball Abutment Cap Set

O-ring attachment for Ball Abutment
Replace O-ring on Ball Abutment Cap
Packing Unit: Ball Abutment Cap (Material: Titanium alloy)+Ball Abutment Lab O-ring (Material: Silicone)

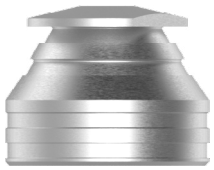

BASRCS

Ball Abutment Retainer Set

Use in case lack of vertical diameter comparing to Ball Abutment Retainer
Packing Unit: Ball Abutment Retainer (Material: Titanium alloy)+Ball Abutment Lab O-ring (Material: Silicone)

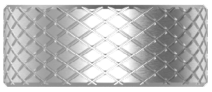

BASRRS

Ball Abutment O-ring Set

O-ring set
Packing Unit: Ball Abutment O-ring 5 EA
Material: Silicone



BASROS

Ball Abutment Lab Analog

Lab Analog for Ball Abutment
Material: Titanium alloy



BAALA

Ball Abutment Driver

Torque driver for Ball Abutment
Material: Stainless Steel (TrimRite®)+Titanium alloy+Silicone



BAD24

Kerator Abutment

Compensation of fixture placement angle up to 40°
1.5mm lower vertical dimension
Composition of multiple attachments with stable retention

Connect with exclusive driver
Recommended tightening torque: 30Ncm

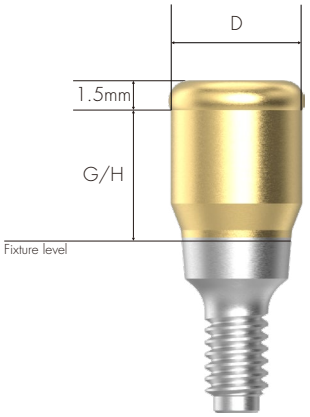

Mini, Regular & Wide

M/R/W

D Ø3.7mm

G/H (mm)

1.0	2.0	3.0	4.0	5.0	6.0
AR401	AR402	AR403	AR404	AR405	AR406

Kerator Angled Abutment

1.5mm lower vertical dimension
Composition of multiple attachments with stable retention

Connect with 1.2 Hex driver
Recommended tightening torque: 30Ncm

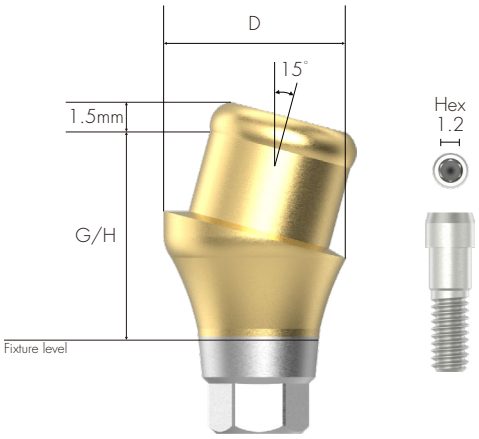

Mini, Regular & Wide

M/R/W

D ∅3.7mm

G/H (mm)

1.5	3.0
	
AR4AN1.5	AR4AN3.0

Kerator CDPH Set

Composition: White spacer / denture cap connected black processing male & Replacement male (Red, Blue & Pink)
Select replacement male of adequate retention to use according to cases
Replace replacement male by using Kerator Magic tool



CDPH SET

Kerator Male Cap

Retention power of KERATOR male cap is down (up to 20%) and red cap(angle) is included in the male package
Colors of cap determine retention power and it minimizes Denture Repair even there is any continuous bone loss

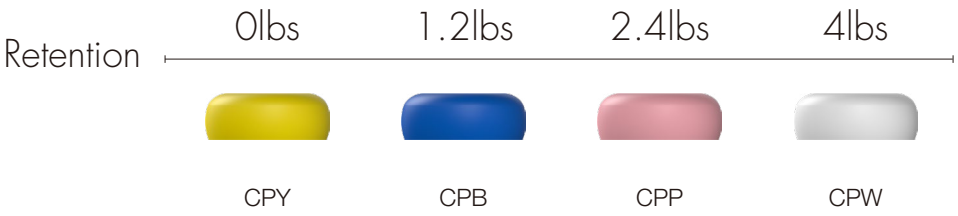



Kerator Magic Tool

Use to connect and remove replacement male on denture cap
As separated into two pieces, it is easy for maintenance



KMH002

Kerator Torque Tip

Torque driver for Kerator Abutment

Round Type



KMD719

Kerator Impression Coping

Pick-up Impression Coping for Kerator abutment
Closed Tray Type



DKI4845

Kerator Lab Analog

Lab Analog for Kerator Abutment



DKA3854

Prosthetic Flow Chart IV



Ti Link Abutment

116 p



Ti Blank Abutment

117 p



Fixture Lab Analog

94 p



Pick-up Impression Coping

90 p



Transfer Impression Coping

92 p



Cover Screw

76 p



Healing Abutment

77 p



1.2 Hex Driver

132 p



ZENEX PLUS Fixture

74 p

ScanBody

ScanBody for manufacturing customized Titanium abutment
Use for Oral scan (Model scan available as well)
Material: Titanium alloy

Tighten with 1.2 Hex Driver by hand

To order as a set as 'ScanBody + ScanBody Screw'
: Product Code + S (ex: RSBR4310S)

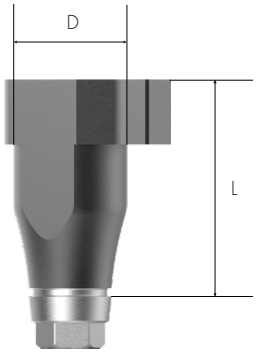

M/R/W

D ∅4.3mm
L 10.0mm



RSBR4310

Ti Link Abutment

Abutment for manufacturing Cement/Combination-retained type prosthesis
For manufacturing custom abutment (Titanium & Zirconia) and crown by CAD/CAM equipment
Select specification fits for fixture Connection
Use exclusive library for ZENEX PLUS Implant system
Fixture Level Impression
Material: Titanium alloy

Tighten with 1.2 Hex Driver
Recommended tightening torque: 30Ncm

To order as a set as 'Abutment + Screw'
: Product Code + S (ex: TLARRH4010S)

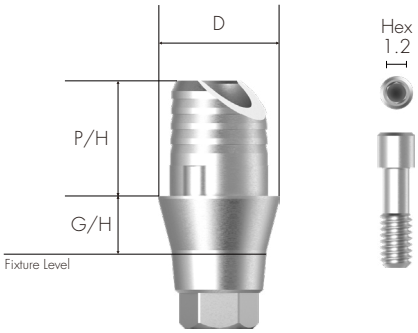

Mini, Regular & Wide

M/R/W

D ∅4.0mm

G/H (mm)	1.0		2.0	
P/H (mm)	3.8			
				
	Hex	Non-Hex	Hex	Non-Hex
	TLARRH4010	TLARRN4010	TLARRH4020	TLARRN4020

Ti Blank Abutment

Manufacturing customized abutment with milling machine
Select specification fits for fixture Connection
Digital Impression
Material: Titanium alloy

Tighten with 1.2 Hex Driver
Recommended tightening torque: 30Ncm
Product line-up applied for various milling machine brands
(Milling machine manufacturer: Arum(Doowon), Manix, Vatech, RND)

To order as a set as 'Abutment + Screw'
: Product Code + S (ex: TBARRH10AS)

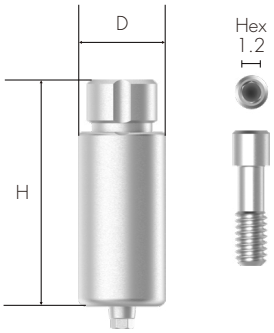

Mini, Regular & Wide

For Arum

M/R/W

D ∅10.0mm

H (mm) — 20



Hex	Non-Hex
TBARRH10A	TBARRN10A

For Manix

M/R/W

D ∅10.0mm

H (mm) — 20



Hex	Non-Hex
TBARRH10M	TBARRN10M

IZEN
IMPLANT

ZENEX KIT

ZENEX KIT

COMPOSITION

122 ZENEX SURGERY KIT
128 ZENEX SIMPLE KIT
150 ZENEX EASY SURGERY KIT
164 ZENEX SUPERWIDE KIT
176 ZENEX PROSTHETIC KIT
184 ZENEX GUIDE KIT
200 ZENEX GUIDE MINI KIT
212 ZENEX GUIDE WIDE KIT

OTHER SURGICAL INSTRUMENTS

238 Tissue Punch
238 Trephine Drill
239 Bone Profiler
240 ZENEX Guide Start Drill

ZENEX SURGERY KIT





R-System

ZENEX SURGERY KIT
(ZENSGKIT)

Composition on lower kit tray



Depth Gauge — DG1720
Torque Wrench — TW60B
Steel Bowl — STBOWL

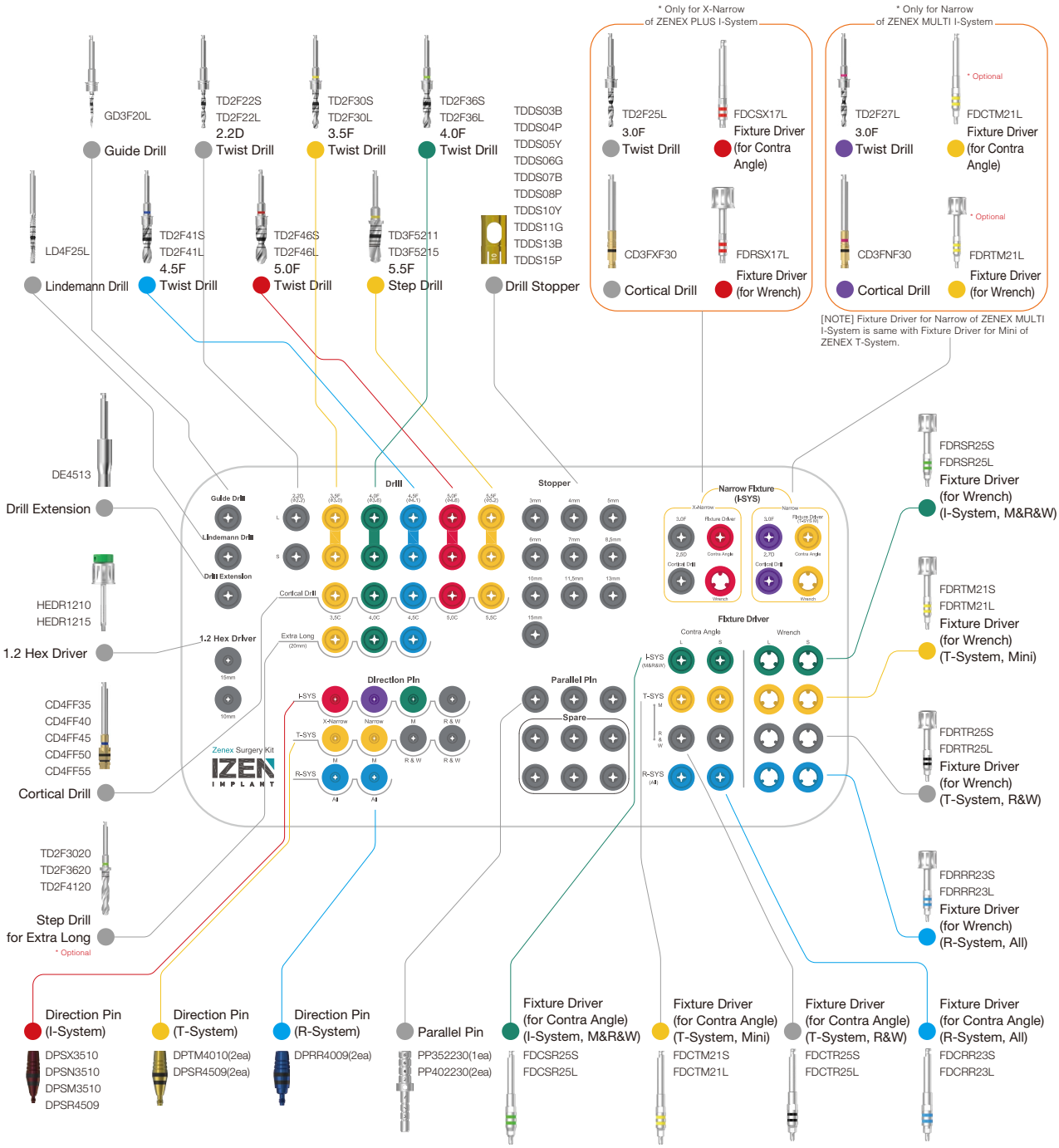

ZENEX SURGERY KIT
R-System (ZENSGRKIT)

Composition on lower kit tray



Depth Gauge
DG1720

Torque Wrench
TW60B

Steel Bowl
STBOWL

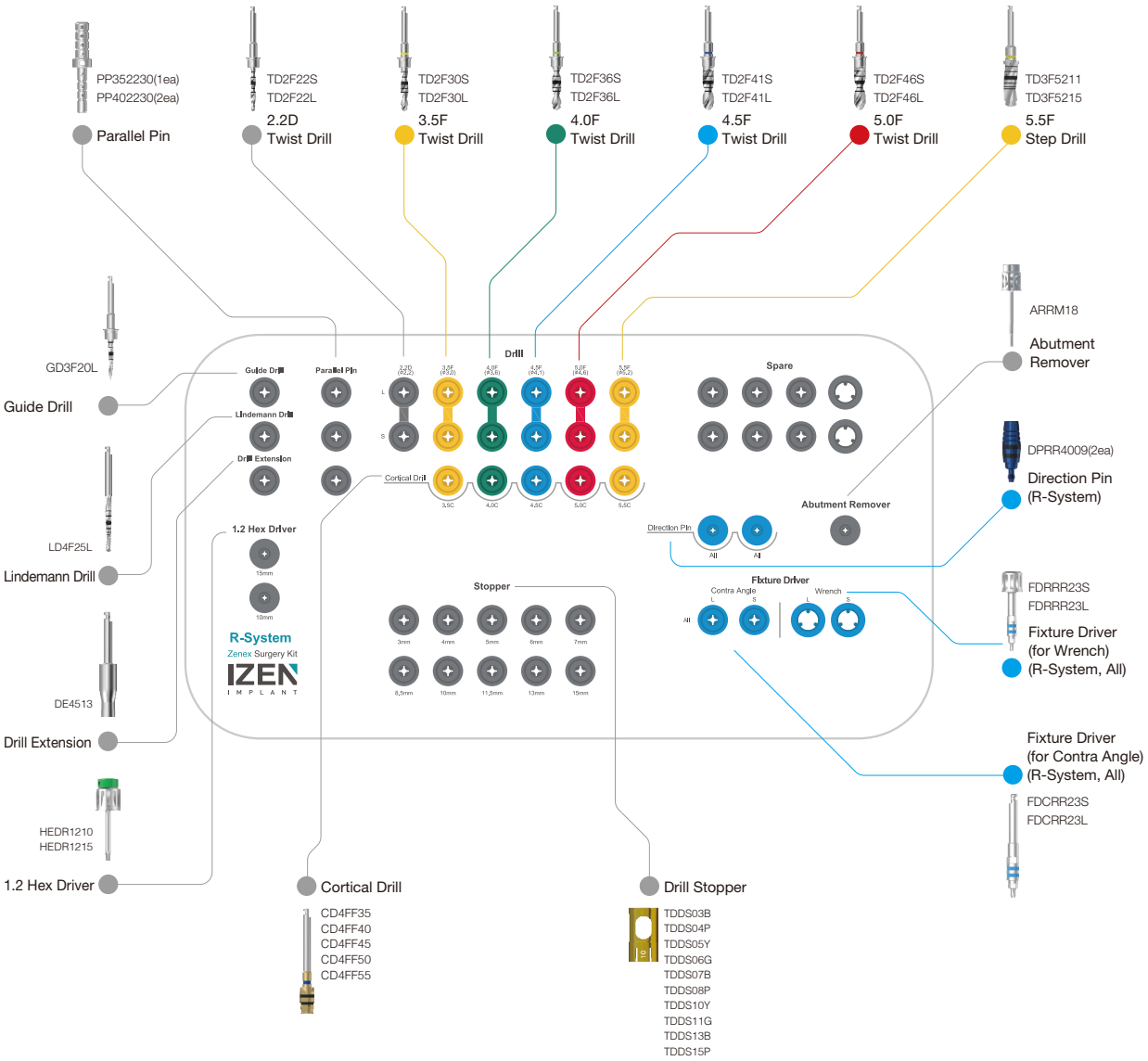

ZENEX SURGERY KIT Instruments

Guide Drill

- Drill to mark base hole on the bone for easy initial drilling
- Available to control drilling depth by using with stopper
- Product Code in the Kit: GD3F20L
- Material: Stainless Steel (TrimRite®)

D1/D2 (mm)	Ø1.5 / Ø2.0
Short	GD3F20S
Long	GD3F20L

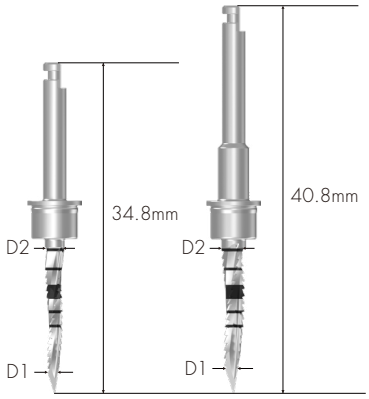

Lindemann Drill

- Outward blades allow side cutting during drilling
- Available to use when removing ridge part of extraction socket
- Product Code in the Kit: LD4F25L
- Material: Stainless Steel (TrimRite®)

D1/D2 (mm)	Ø1.5 / Ø2.0	Ø2.0 / Ø2.5
Short	LD4F20S	LD4F25S
Long	LD4F20L	LD4F25L

D1/D2 (mm)	Ø3.0 / Ø3.5
Medium	LD4F35M

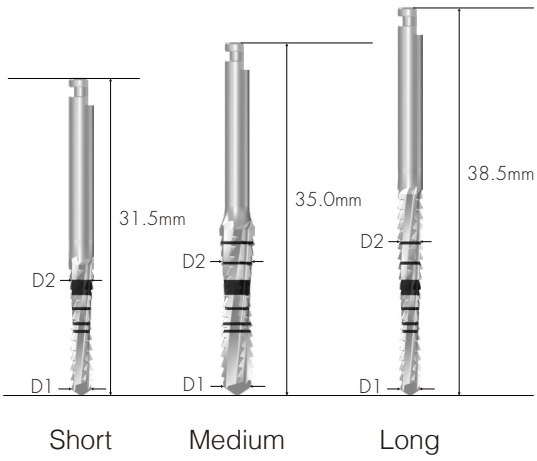

ZENEX SURGERY KIT Instruments

Drill Extension

- Lengthen surgical instrument in use by connecting to drill and Implant motor
- Be sure to use after accurate connection to prevent product detachment or bending that connected to Drill Extension
- Material: Stainless Steel (TrimRite®) +Titanium alloy

DE4513

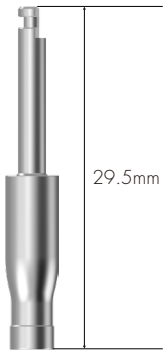

Twist Drill

- Straight drill to shorten surgery steps
- Available to drill to desired depth by attaching stopper (marking line matches with stopper connection)
- Be sure to use stopper since depth control may be difficult due to excellent cutting power.
- Drill of 3.0F (Ø2.2/ 2.5) is applied only for X-Narrow of ZENEX Plus I-System. (Product code in the Kit : TD2F25L)
- Drill of 3.0F (Ø2.2/ 2.7) is applied only for Narrow of ZENEX Multi I-System. (Product code in the Kit : TD2F27L)
- Material: Stainless Steel (TrimRite®)

*Optional

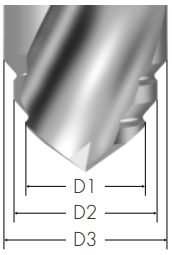

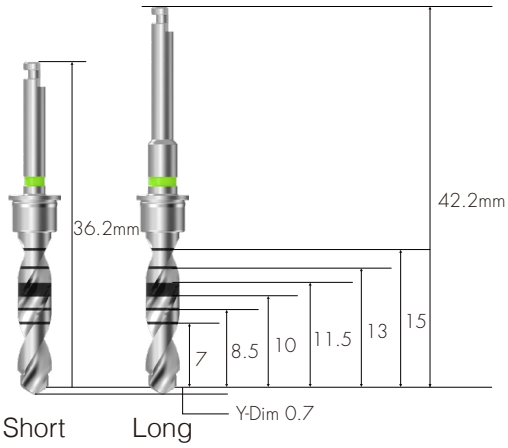

D1/D2/D3 (mm)	2.2D (Ø1.8/ Ø2.2)	3.0F (Ø2.2 / Ø2.5)	3.0F (Ø2.2 / Ø2.7)	3.5F (Ø2.2 / Ø3.0)
Short	TD2F22S	TD2F25S *	TD2F27S *	TD2F30S
Long	TD2F22L	TD2F25L	TD2F27L	TD2F30L

D1/D2/D3 (mm)	4.0F (Ø3.0 / Ø3.6)	4.5F (Ø3.0 / Ø3.6 / Ø4.1)	5.0F (Ø3.0 / Ø4.1 / Ø4.6)
Short	TD2F36S	TD2F41S	TD2F46S
Long	TD2F36L	TD2F41L	TD2F46L

Step Drill

- Straight drill to shorten surgery steps
- As stopper is applied in the drill, secure to use although depth control may be difficult due to excellent cutting power
- Colored line on grip part of drill indicates diameter of drill and matching fixture size.
- Material: Stainless Steel (TrimRite®)

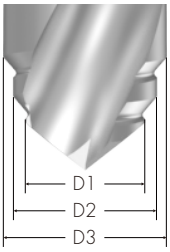

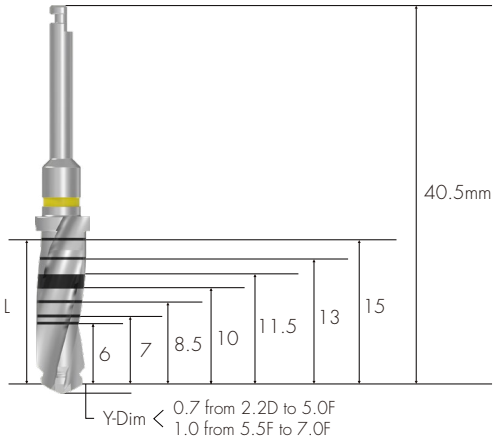

- Two kinds of 5.5F Drill (Ø 4.6 / Ø 5.2) are included.

D1/D2/D3 (mm)	5.5F (Ø4.6 / Ø5.2)
Short	TD3F5211
Long	TD3F5215

- Optional extras: Three kinds of step drill for 20mm extra long







D1/D2/D3 (mm)	3.5F (Ø2.2 / Ø3.0)	4.0F (Ø3.0 / Ø3.6)	4.5F (Ø3.0 / Ø3.6 / Ø4.1)
Extra long	TD2F3020	TD2F3620	TD2F4120

ZENEX SURGERY KIT Instruments

Drill Stopper

- Indicated number on each stopper means exposed length, excluding head of drill (Y-Dim) when connected to drill
- Differentiate color by length for easy identification
- Material: Titanium alloy

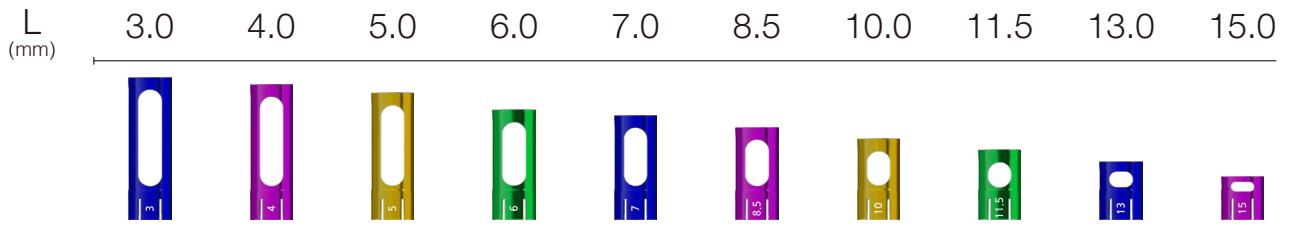

L (mm)	3.0	4.0	5.0	6.0	7.0	8.5	10.0	11.5	13.0	15.0
	TDDS03B	TDDS04P	TDDS05Y	TDDS06G	TDDS07B	TDDS08P	TDDS10Y	TDDS11G	TDDS13B	TDDS15P
COLOR	Blue	Purple	Yellow	Green	Blue	Purple	Yellow	Green	Blue	Purple

Cortical Drill

- Drill used for removing cortical bone from hard bone
- Drill to the bottom of each marking line
- The lower marking line is for drilling on normal bone and the upper marking line is for drilling on hard bone
- Material: Stainless Steel (TrimRite®)

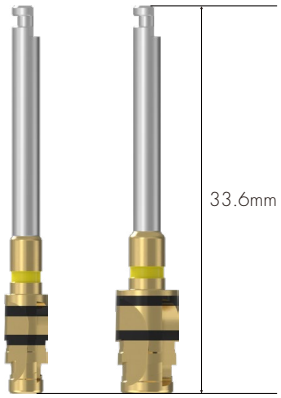

	3.0C (X-Narrow)	3.0C (Narrow)	3.5C	4.0C	4.5C	5.0C	5.5C
	CD3FXF30	CD3FNF30	CD4FF35	CD4FF40	CD4FF45	CD4FF50	CD4FF55
COLOR	None	Purple	Yellow	Green	Blue	Red	Yellow

Direction Pin

- Confirm gingiva height and path after implant placement
- DPSR4509: Available to use in case of ZENEX I-System (Regular & Wide) and ZENEX T-System (Regular & Wide)
- Material: Titanium alloy

I-System



	DPSX3510	DPSN3510	DPSM3510	DPSR4509
COLOR	Red	Purple	Green	Metal

- For ZENEX MULTI I-System (based on connection): Narrow, Mini, Regualr & Wide
- For ZENEX PLUS I-System (based on connection): X-Narrow, Mini, Regualr & Wide

T-System

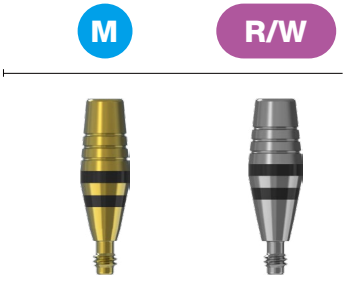

	DPTM4010	DPSR4509
COLOR	Yellow	Metal

R-System



	DPRR4009
COLOR	Blue

ZENEX SURGERY KIT Instruments

Parallel Pin

- Used for confirmation of drilling depth and path
- Available to use after drilling with Ø2.2 Drill and Ø3.0 drill
- Composition in the kit: PP352230 (1 ea) + PP402230 (2 ea)
- Material: Stainless Steel

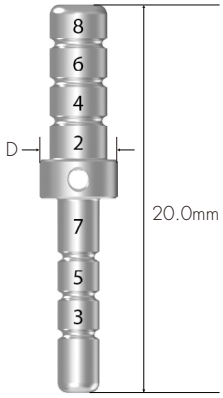

D (mm)	Ø3.5	Ø4.0	Ø5.0	Ø6.0
	PP352230	PP402230	PP502230	PP602230

Fixture Driver

- For Contra Angle: Directly attached to fixture by connecting to handpiece when using Implant motor
- For Wrench: Directly attached to fixure by using Torque Wrench
- Two-staged coloring enables measurement up to 5mm height at 1mm intervals
- Be sure to use after accurate connection because once used with incorrectly connected driver, it is impossible to remove fixture
- Be sure to use accurate fixture driver according to the system of fixture.

※ Fixture Driver for Narrow of ZENEX MULTI I-System: Same with Mini of ZENEX T-System (**Optional**)

- Material: Stainless Steel (TrimRite®)

I-System

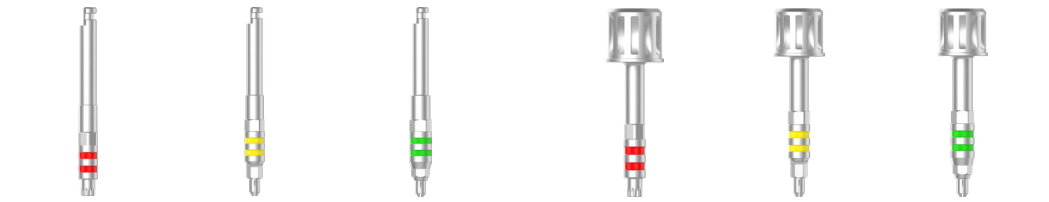

	Contra Angle			Wrench		
Short	FDCSX17S	FDCTM21S	FDCSR25S	FDRSX17S	FDRTM21S	FDRSR25S
Long	FDCSX17L	FDCTM21L	FDCSR25L	FDRSX17L	FDRTM21L	FDRSR25L
COLOR	Red	Yellow	Green	Red	Yellow	Green

- For ZENEX MULTI I-System (based on connection): Narrow, Mini, Regualr & Wide
- For ZENEX PLUS I-System (based on connection): X-Narrow, Mini, Regualr & Wide

T-System

	Contra Angle		Wrench	
	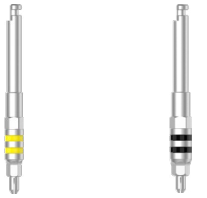			
	M	R/W	M	R/W
Short	FDCTM21S	FDCTR25S	FDRTM21S	FDRTR25S
Long	FDCTM21L	FDCTR25L	FDRTM21L	FDRTR25L
COLOR	Yellow	Black	Yellow	Black

R-System

	Contra Angle	Wrench
		
	M/R/W	M/R/W
Short	FDCRR23S	FDRRR23S
Long	FDCRR23L	FDRRR23L
COLOR	Blue	Blue

1.2 Hex Driver

- Driver for connecting with Torque Wrench
- Used for connecting to cover screw and surgical instrument with 1.2 Hex
- Follow recommended tightening torque calculation value
- Be sure to check transformation of Hex tip before use
- Material: Stainless Steel+Titanium alloy

L (mm)	10.0	15.0
	HEDR1210	HEDR1215

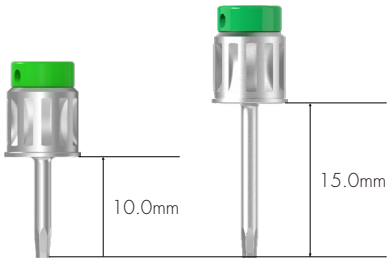

Torque Wrench

- Used for placing fixture and tightening implant abutments and screws
- Confirm torque calculation value by pulling the bar to be aligned with the marked line
- Recommended to use by pressing head to prevent detachment of Torque Wrench and surgical instruments
- Material: Stainless Steel



TW60B

Depth Gauge

- Measuring drilling depth
- Measurable depth: 6~20mm
- Material: Titanium alloy

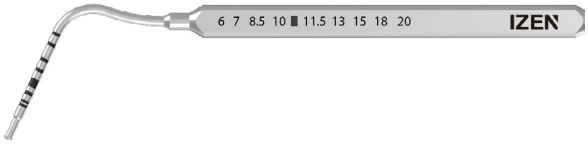

DG1720

Steel Bowl

- Used for cleaning surgery instruments
- Material: Stainless Steel



STBOWL

Drilling Sequence

Ø 3.5mm Fixture

(ZENEX MULTI & PLUS R-System Mini)

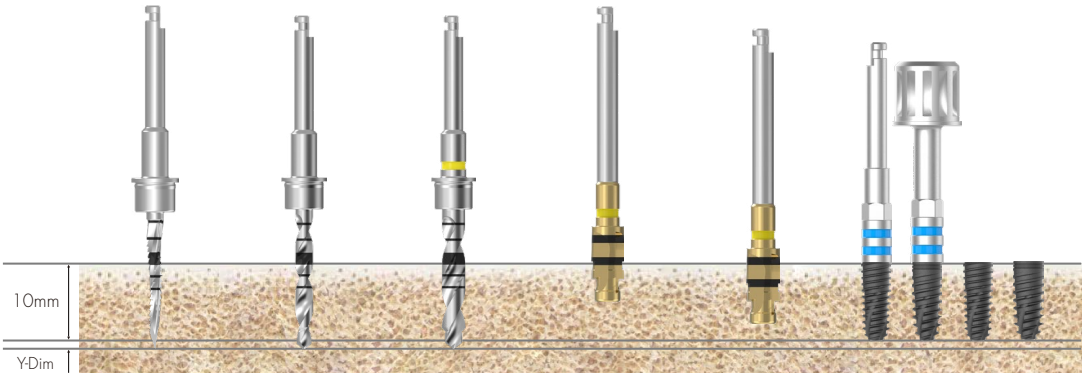

Bone Quality	Guide Drill	Twist Drill (Ø2.2)	Twist Drill (Ø3.0)	Cortical Drill (Lower Line)	Cortical Drill (Upper Line)	Ø3.5 Fixture
Soft	▶	▶	▶			
Normal	▶	▶	▶	▶		Implant Placement
Hard	▶	▶	▶		▶	

Ø 4.0mm Fixture

(ZENEX MULTI & PLUS R-System Regular)

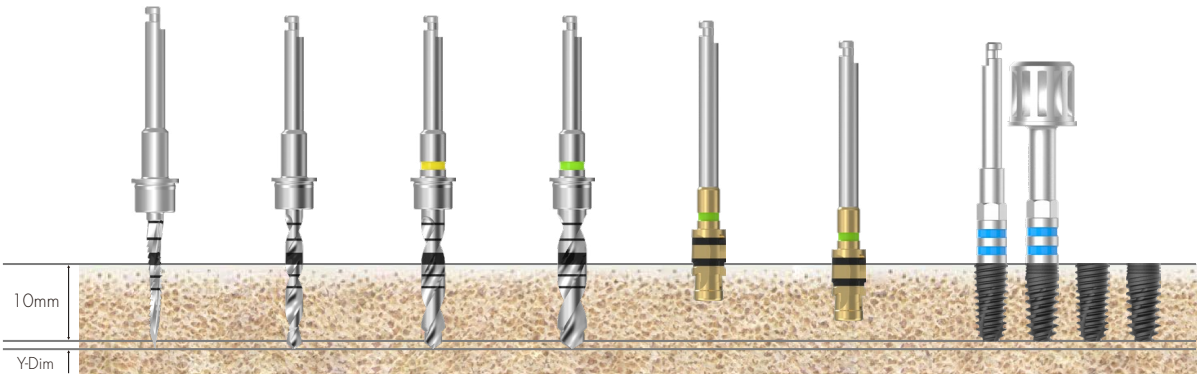

Bone Quality	Guide Drill	Twist Drill (Ø2.2)	Twist Drill (Ø3.0)	Twist Drill (Ø3.6)	Cortical Drill (Lower Line)	Cortical Drill (Upper Line)	Ø4.0 Fixture
Soft	▶	▶	▶	▶			
Normal	▶	▶	▶	▶	▶		Implant Placement
Hard	▶	▶	▶	▶		▶	

Drilling Sequence

Ø 4.5mm Fixture

(ZENEX MULTI & PLUS R-System Regular)

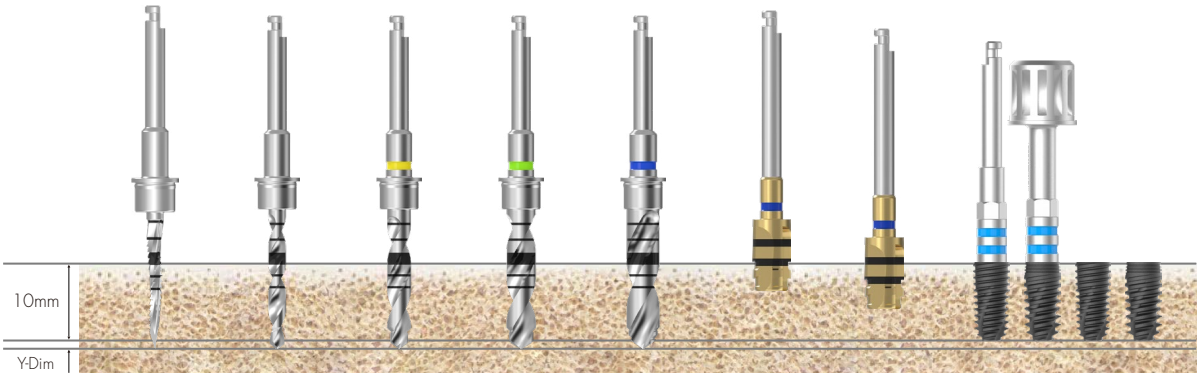

Bone Quality	Guide Drill	Twist Drill (Ø2.2)	Twist Drill (Ø3.0)	Twist Drill (Ø3.6)	Twist Drill (Ø4.1)	Cortical Drill (Lower Line)	Cortical Drill (Upper Line)	Ø4.5 Fixture
Soft	▶	▶	▶	▶	▶			
Normal	▶	▶	▶	▶	▶	▶		Implant Placement
Hard	▶	▶	▶	▶	▶		▶	

Ø 5.0mm Fixture

(ZENEX MULTI & PLUS R-System Wide)

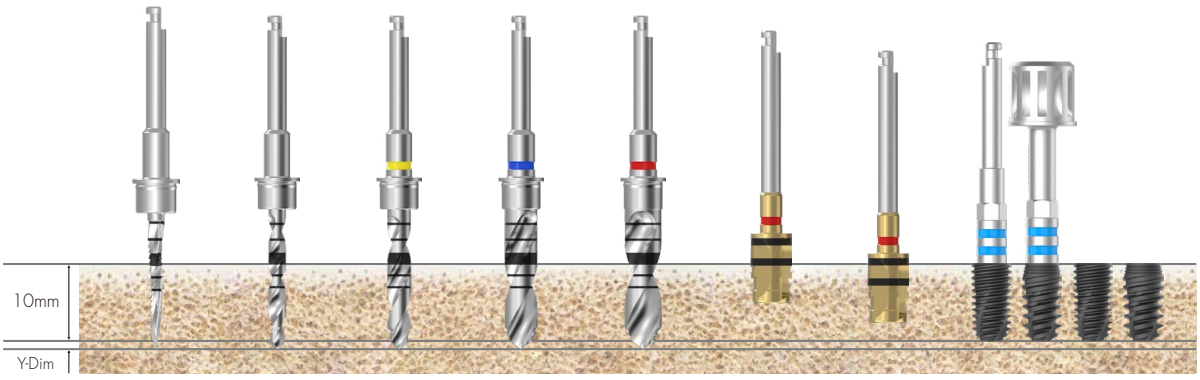

Bone Quality	Guide Drill	Twist Drill (Ø2.2)	Twist Drill (Ø3.0)	Twist Drill (Ø4.1)	Twist Drill (Ø4.6)	Cortical Drill (Lower Line)	Cortical Drill (Upper Line)	Ø5.0 Fixture
Soft	▶	▶	▶	▶	▶			
Normal	▶	▶	▶	▶	▶	▶		Implant Placement
Hard	▶	▶	▶	▶	▶		▶	

Drilling Sequence

Ø 5.5mm Fixture

(ZENEX MULTI & PLUS R-System Wide)

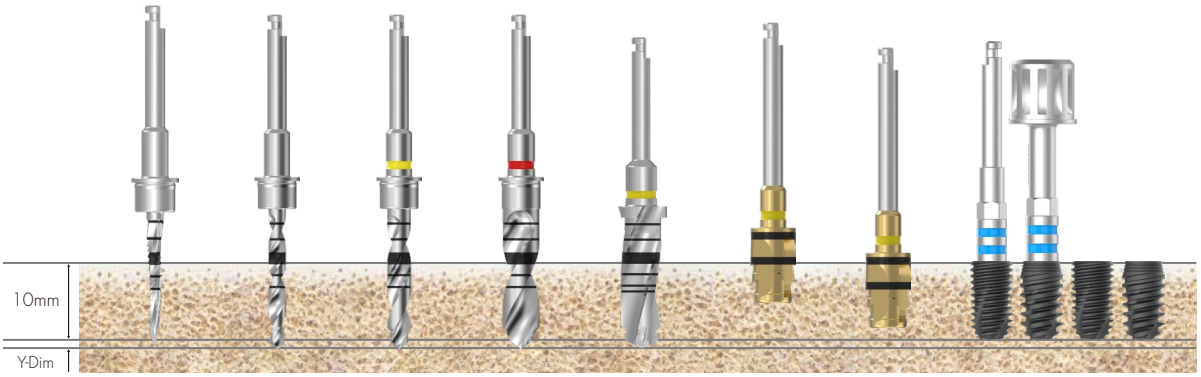

Bone Quality	Guide Drill	Twist Drill (Ø2.2)	Twist Drill (Ø3.0)	Twist Drill (Ø4.6)	Step Drill (Ø5.2)	Cortical Drill (Lower Line)	Cortical Drill (Upper Line)	Ø5.5 Fixture
Soft	▶	▶	▶	▶	▶			
Normal	▶	▶	▶	▶	▶	▶		Implant Placement
Hard	▶	▶	▶	▶	▶		▶	

IZEN
IMPLANT

ZENEX SIMPLE KIT



R-System

ZENEX SIMPLE KIT
R-System (ZENSPRKIT)

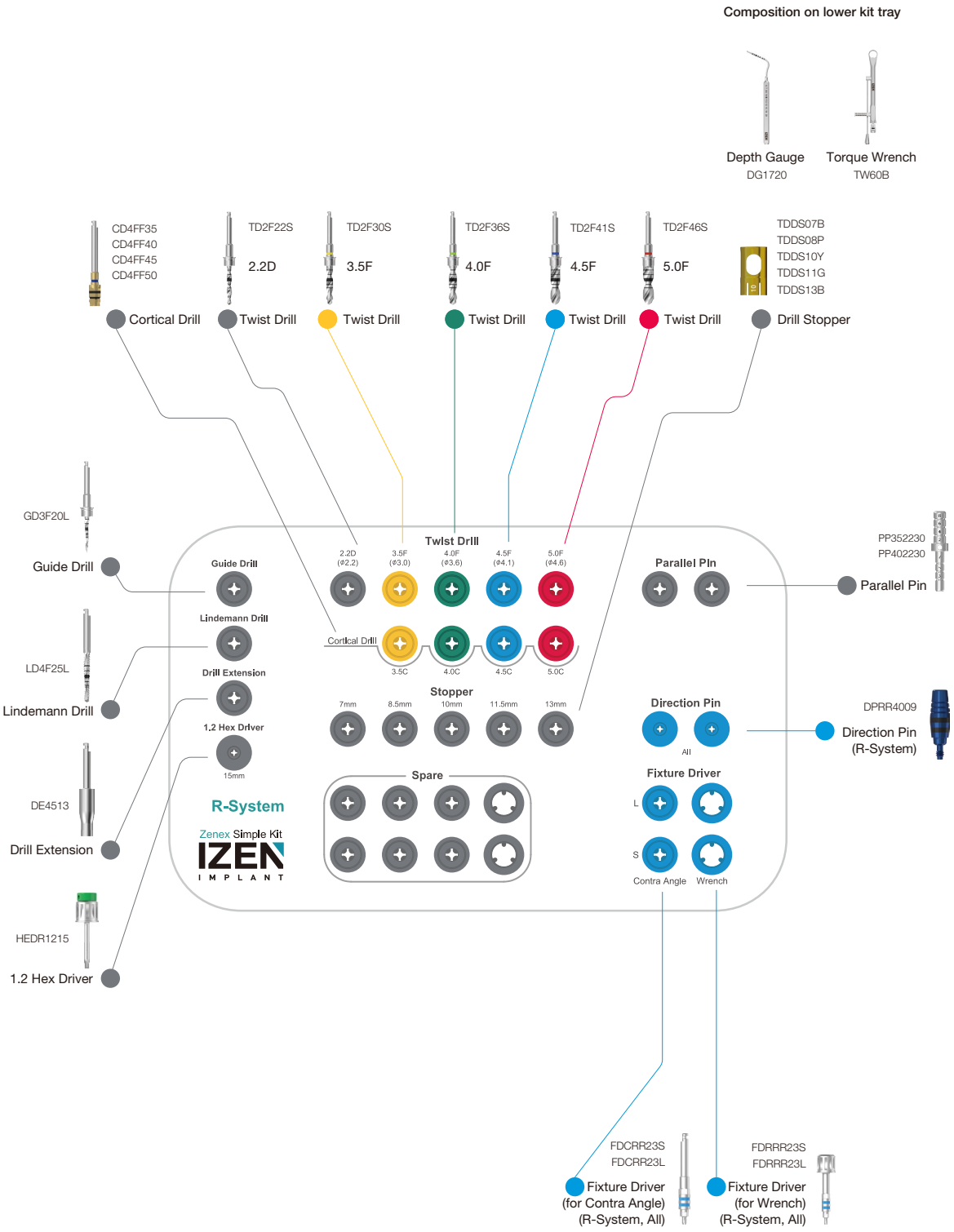

ZENEX SIMPLE KIT Instruments

Guide Drill

- Drill to mark base hole on the bone for easy initial drilling
- Available to control drilling depth by using with stopper
- Product Code in the Kit: GD3F20L
- Material: Stainless Steel (TrimRite®)

D1/D2 (mm)	Ø1.5 / Ø2.0
Short	GD3F20S
Long	GD3F20L

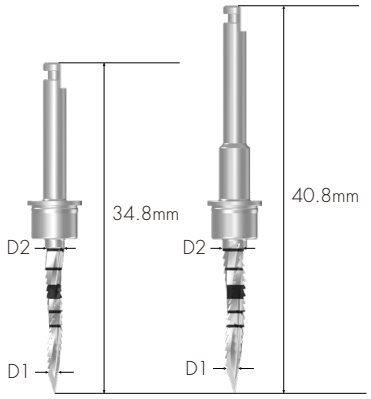

Lindemann Drill

- Outward blades allow side cutting during drilling
- Available to use when removing ridge part of extraction socket
- Product Code in the Kit: LD4F25L
- Material: Stainless Steel (TrimRite®)

D1/D2 (mm)	Ø1.5 / Ø2.0	Ø2.0 / Ø2.5
Short	LD4F20S	LD4F25S
Long	LD4F20L	LD4F25L

D1/D2 (mm)	Ø3.0 / Ø3.5
Medium	LD4F35M

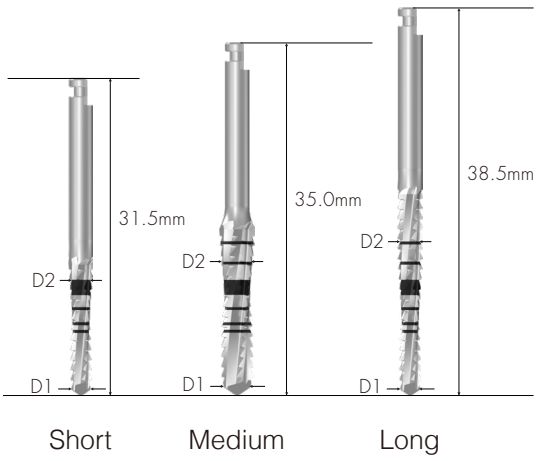

Drill Extension

- Lengthen surgical instrument in use by connecting to drill and Implant motor
- Be sure to use after accurate connection to prevent product detachment or bending that connected to Drill Extension
- Material: Stainless Steel (TrimRite®) +Titanium alloy

DE4513

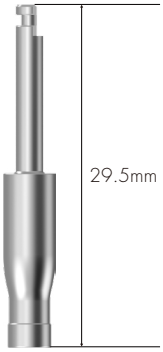

Twist Drill

- Straight drill to shorten surgery steps
- Available to drill to desired depth by attaching stopper (marking line matches with stopper connection)
- Be sure to use stopper since depth control may be difficult due to excellent cutting power.
- Material: Stainless Steel (TrimRite®)

*Optional

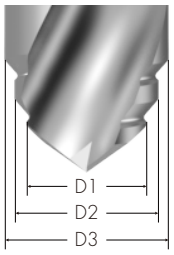

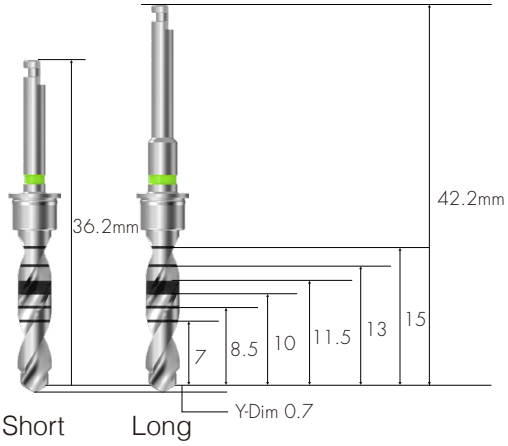

D1/D2/D3 (mm)	2.2D (Ø1.8/ Ø2.2)	3.5F (Ø2.2 / Ø3.0)	4.0F (Ø3.0 / Ø3.6)
Short	TD2F22S	TD2F30S	TD2F36S

D1/D2/D3 (mm)	4.5F (Ø3.0 / Ø3.6 / Ø4.1)	5.0F (Ø3.0 / Ø4.1 / Ø4.6)
Short	TD2F41S	TD2F46S

ZENEX SIMPLE KIT Instruments

Drill Stopper

- Indicated number on each stopper means exposed length, excluding head of drill (Y-Dim) when connected to drill
- Differentiate color by length for easy identification
- Material: Titanium alloy

L (mm)	7.0	8.5	10.0	11.5	13.0
					
	TDDS07B	TDDS08P	TDDS10Y	TDDS11G	TDDS13B
COLOR	Blue	Purple	Yellow	Green	Blue

Cortical Drill

- Drill used for removing cortical bone from hard bone
- Drill to the bottom of each marking line
- The lower marking line is for drilling on normal bone and the upper marking line is for drilling on hard bone
- Material: Stainless Steel (TrimRite®)

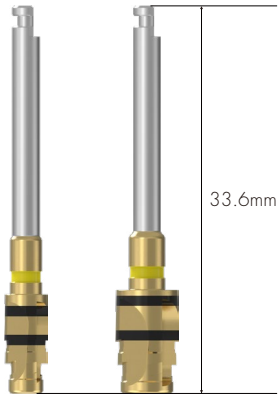

	3.5C	4.0C	4.5C	5.0C
	CD4FF35	CD4FF40	CD4FF45	CD4FF50
COLOR	Yellow	Green	Blue	Red

Direction Pin

- Confirm gingiva height and path after implant placement
- DPSR4509: Available to use in case of ZENEX I-System (Regular & Wide) and ZENEX T-System (Regular & Wide)
- Material: Titanium alloy

I-System

	X-N	N	M	R/W
				
	DPSX3510	DPSN3510	DPSM3510	DPSR4509
COLOR	Red	Purple	Green	Metal

- For ZENEX MULTI I-System (based on connection): Narrow, Mini, Regualr & Wide
- For ZENEX PLUS I-System (based on connection): X-Narrow, Mini, Regualr & Wide

T-System

	M	R/W
		
	DPTM4010	DPSR4509
COLOR	Yellow	Metal

R-System

	M/R/W
	
	DPRR4009
COLOR	Blue

ZENEX SIMPLE KIT Instruments

Parallel Pin

- Used for confirmation of drilling depth and path
- Available to use after drilling with Ø2.2 Drill and Ø3.0 drill
- Composition in the kit: PP352230 (1 ea) + PP402230 (2 ea)
- Material: Stainless Steel

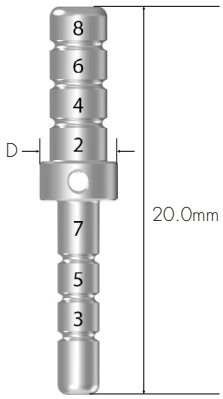

D (mm)	Ø3.5	Ø4.0	Ø5.0	Ø6.0
	PP352230	PP402230	PP502230	PP602230

Fixture Driver

- For Contra Angle: Directly attached to fixture by connecting to handpiece when using Implant motor
- For Wrench: Directly attached to fixure by using Torque Wrench
- Two-staged coloring enables measurement up to 5mm height at 1mm intervals
- Be sure to use after accurate connection because once used with incorrectly connected driver, it is impossible to remove fixture
- Be sure to use accurate fixture driver according to the system of fixture.

※ Fixture Driver for Narrow of ZENEX MULTI I-System: Same with Mini of ZENEX T-System (**Optional**)

- Material: Stainless Steel (TrimRite®)

I-System



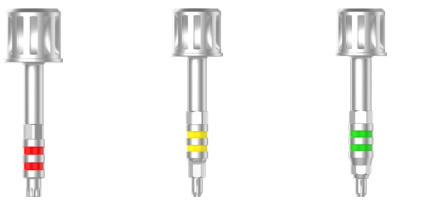

	Contra Angle			Wrench		
Short	FDCSX17S	FDCTM21S	FDCSR25S	FDRSX17S	FDRTM21S	FDRSR25S
Long	FDCSX17L	FDCTM21L	FDCSR25L	FDRSX17L	FDRTM21L	FDRSR25L
COLOR	Red	Yellow	Green	Red	Yellow	Green

- For ZENEX MULTI I-System (based on connection): Narrow, Mini, Regualr & Wide
- For ZENEX PLUS I-System (based on connection): X-Narrow, Mini, Regualr & Wide

T-System

	Contra Angle		Wrench	
				
	M	R/W	M	R/W
Short	FDCTM21S	FDCTR25S	FDRTM21S	FDRTR25S
Long	FDCTM21L	FDCTR25L	FDRTM21L	FDRTR25L
COLOR	Yellow	Black	Yellow	Black

R-System

	Contra Angle	Wrench
		
	M/R/W	M/R/W
Short	FDCRR23S	FDRRR23S
Long	FDCRR23L	FDRRR23L
COLOR	Blue	Blue

ZENEX SIMPLE KIT Instruments

1.2 Hex Driver

- Driver for connecting with Torque Wrench
- Used for connecting to cover screw and surgical instrument with 1.2 Hex
- Follow recommended tightening torque calculation value
- Be sure to check transformation of Hex tip before use
- Product Code in the Kit: HEDR1215
- Material: Stainless Steel+Titanium alloy

L (mm)	10.0	15.0
	HEDR1210	HEDR1215

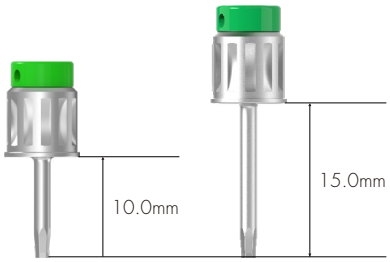

Torque Wrench

- Used for placing fixture and tightening implant abutments and screws
- Confirm torque calculation value by pulling the bar to be aligned with the marked line
- Recommended to use by pressing head to prevent detachment of Torque Wrench and surgical instruments
- Material: Stainless Steel



TW60B

Depth Gauge

- Measuring drilling depth
- Measurable depth: 6~20mm
- Material: Titanium alloy

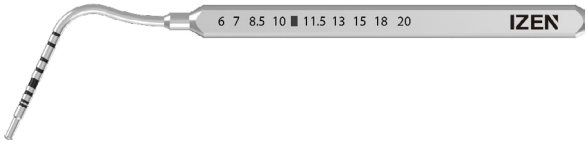

DG1720

Drilling Sequence

Ø 3.5mm Fixture

(ZENEX MULTI & PLUS R-System Mini)

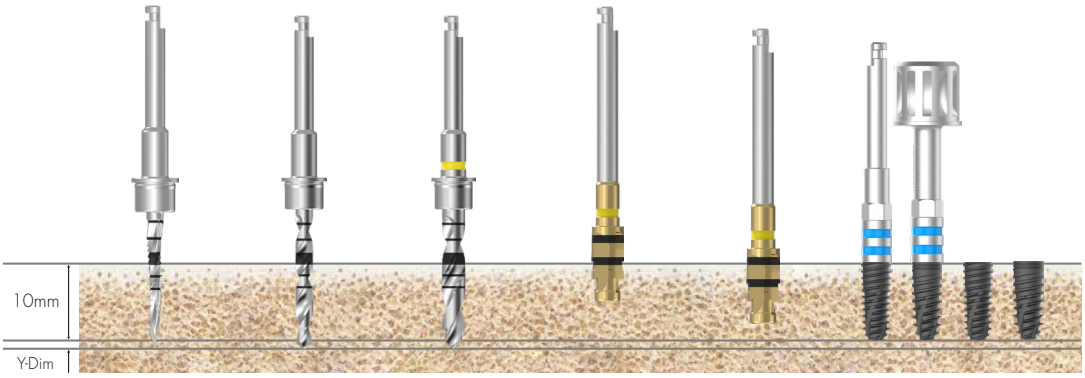

Bone Quality	Guide Drill	Twist Drill (Ø2.2)	Twist Drill (Ø3.0)	Cortical Drill (Lower Line)	Cortical Drill (Upper Line)	Ø3.5 Fixture
Soft	▶	▶	▶			
Normal	▶	▶	▶	▶		Implant Placement
Hard	▶	▶	▶		▶	

Ø 4.0mm Fixture

(ZENEX MULTI & PLUS R-System Regular)

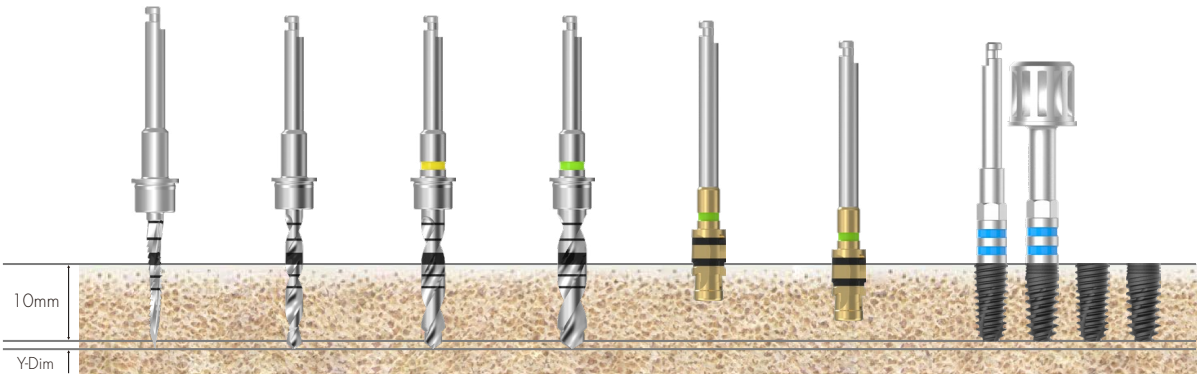

Bone Quality	Guide Drill	Twist Drill (Ø2.2)	Twist Drill (Ø3.0)	Twist Drill (Ø3.6)	Cortical Drill (Lower Line)	Cortical Drill (Upper Line)	Ø4.0 Fixture
Soft	▶	▶	▶	▶			
Normal	▶	▶	▶	▶	▶		Implant Placement
Hard	▶	▶	▶	▶		▶	

Drilling Sequence

Ø 4.5mm Fixture

(ZENEX MULTI & PLUS R-System Regular)

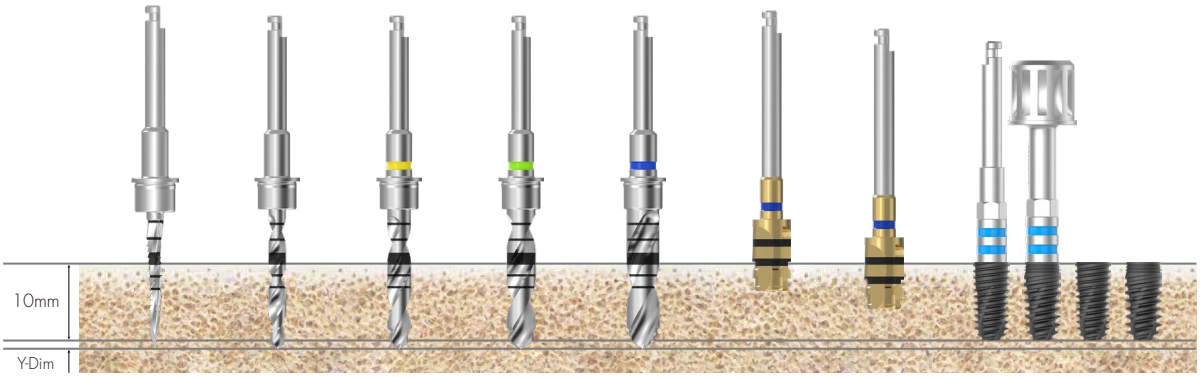

Bone Quality	Guide Drill	Twist Drill (Ø2.2)	Twist Drill (Ø3.0)	Twist Drill (Ø3.6)	Twist Drill (Ø4.1)	Cortical Drill (Lower Line)	Cortical Drill (Upper Line)	Ø4.5 Fixture
Soft	▶	▶	▶	▶	▶			
Normal	▶	▶	▶	▶	▶	▶		Implant Placement
Hard	▶	▶	▶	▶	▶		▶	

Ø 5.0mm Fixture

(ZENEX MULTI & PLUS R-System Wide)

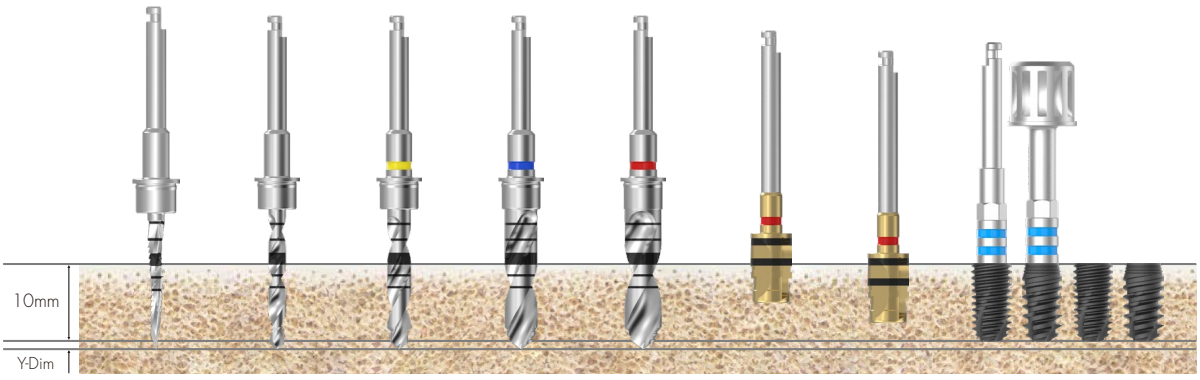

Bone Quality	Guide Drill	Twist Drill (Ø2.2)	Twist Drill (Ø3.0)	Twist Drill (Ø4.1)	Twist Drill (Ø4.6)	Cortical Drill (Lower Line)	Cortical Drill (Upper Line)	Ø5.0 Fixture
Soft	▶	▶	▶	▶	▶			
Normal	▶	▶	▶	▶	▶	▶		Implant Placement
Hard	▶	▶	▶	▶	▶		▶	

ZENEX EASY SURGERY KIT

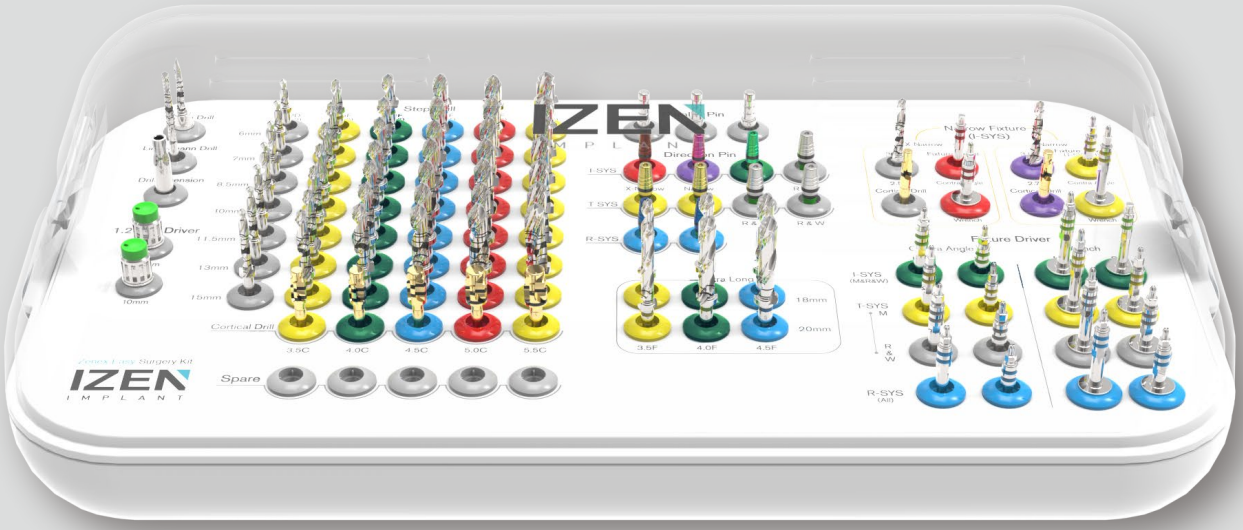



R-System

ZENEX EASY SURGERY KIT (ZENESKIT)

Composition on lower kit tray



Depth Gauge
DG1720

Torque Wrench
TW60B

Steel Bowl
STBOWL

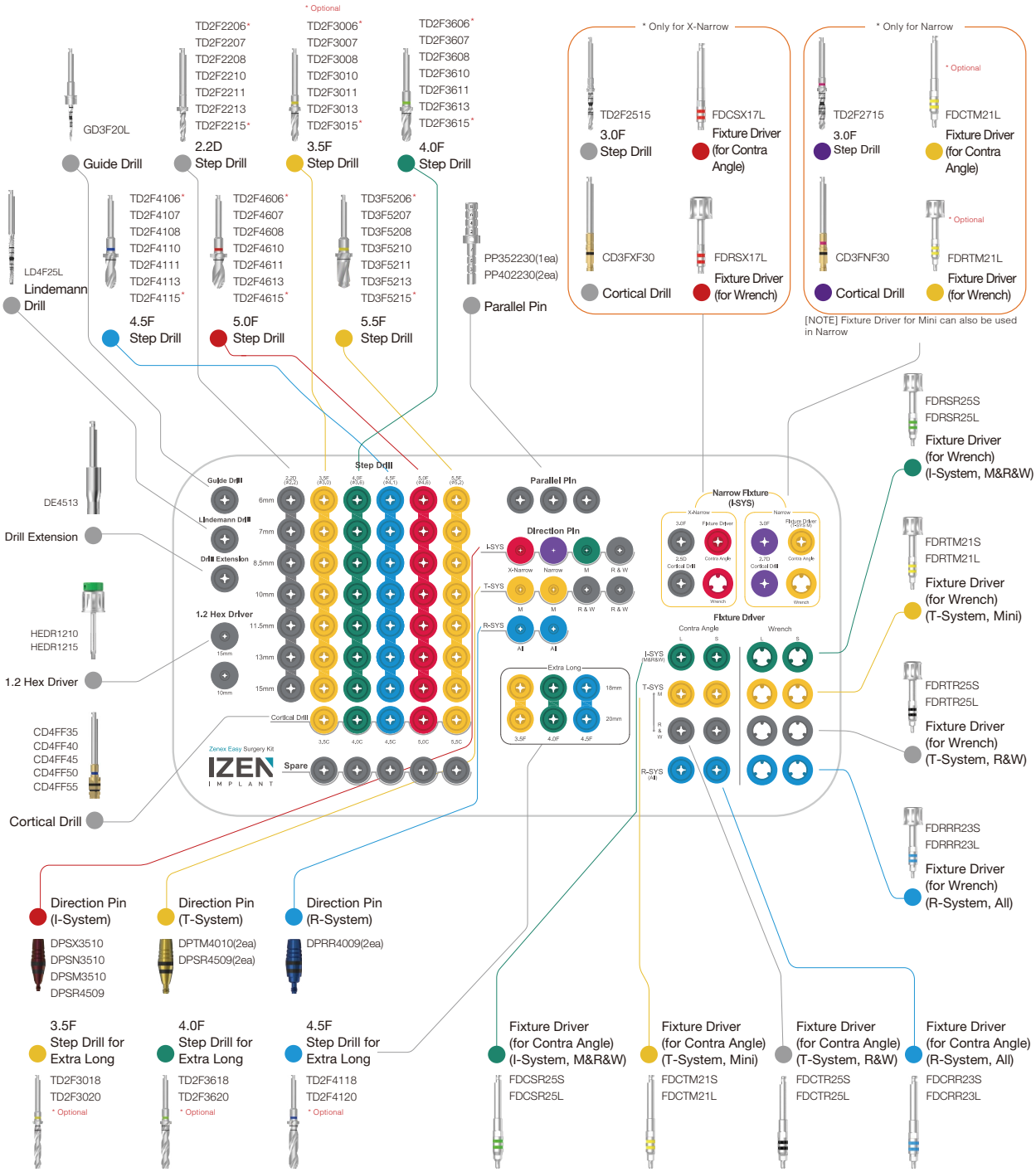

ZENEX EASY SURGERY KIT
R-System (ZENESRKIT)

Composition on lower kit tray



Depth Gauge
DG1720

Torque Wrench
TW60B

Steel Bowl
STBOWL

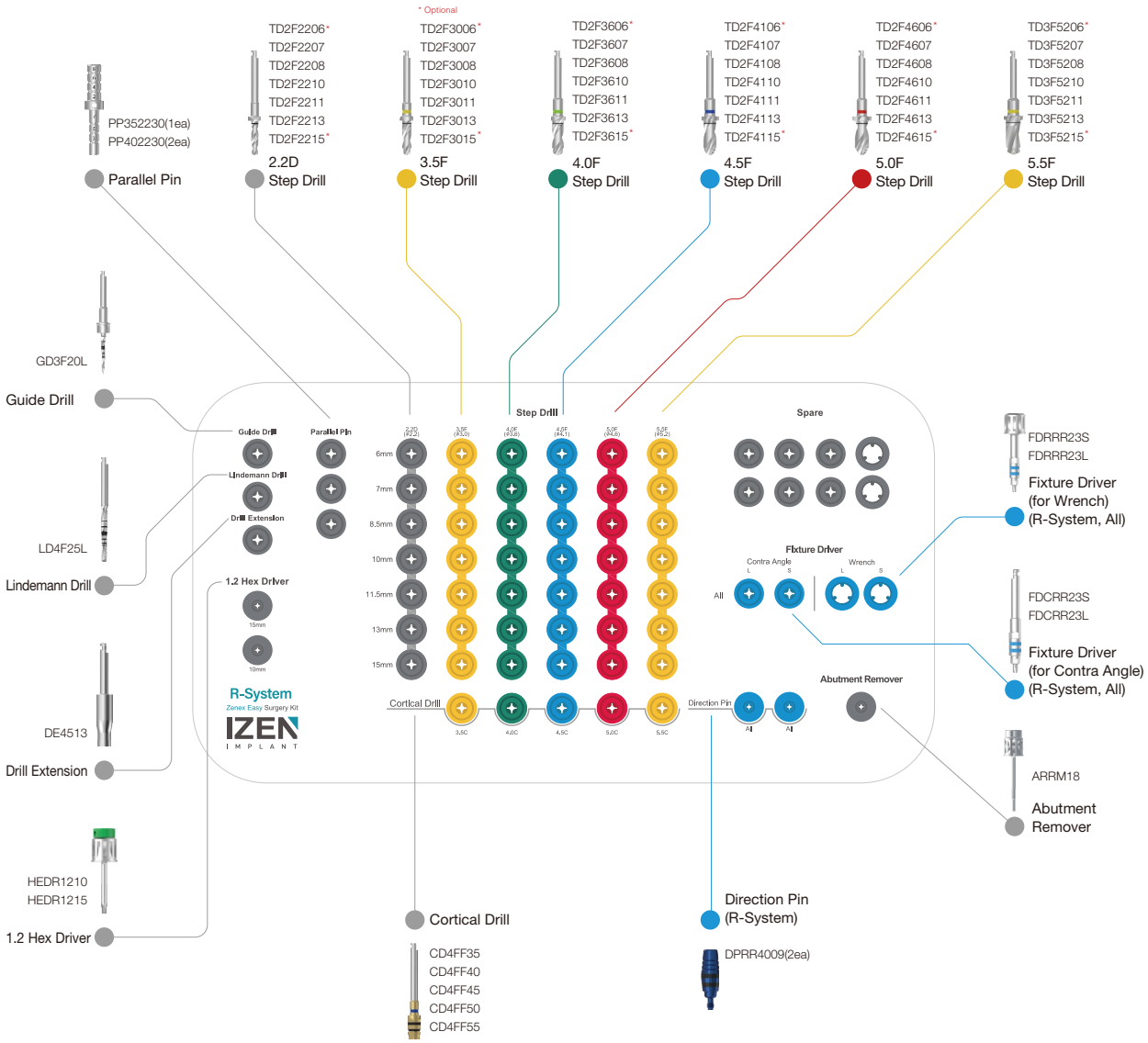

ZENEX EASY SURGERY KIT Instruments

Guide Drill

- Drill to mark base hole on the bone for easy initial drilling
- Available to control drilling depth by using with stopper
- Product Code in the Kit: GD3F20L
- Material: Stainless Steel (TrimRite®)

D1/D2 (mm)	Ø1.5 / Ø2.0
Short	GD3F20S
Long	GD3F20L

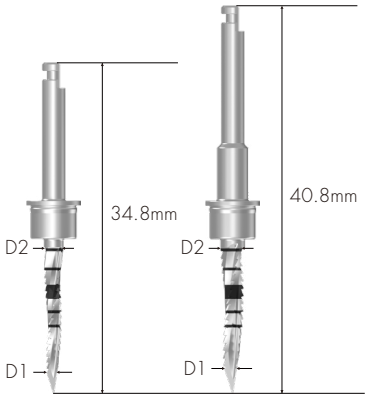

Lindemann Drill

- Outward blades allow side cutting during drilling
- Available to use when removing ridge part of extraction socket
- Product Code in the Kit: LD4F25L
- Material: Stainless Steel (TrimRite®)

D1/D2 (mm)	Ø1.5 / Ø2.0	Ø2.0 / Ø2.5
Short	LD4F20S	LD4F25S
Long	LD4F20L	LD4F25L

D1/D2 (mm)	Ø3.0 / Ø3.5
Medium	LD4F35M

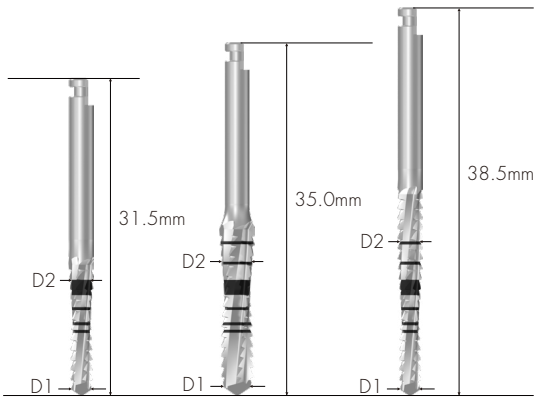

ZENEX EASY SURGERY KIT Instruments

Drill Extension

- Lengthen surgical instrument in use by connecting to drill and Implant motor
- Be sure to use after accurate connection to prevent product detachment or bending that connected to Drill Extension
- Material: Stainless Steel (TrimRite®) +Titanium alloy

DE4513

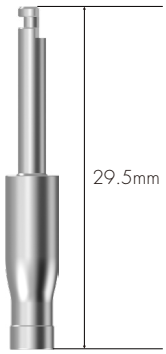

Step Drill

- Straight drill to shorten surgery steps
- As stopper is applied in the drill, secure to use although depth control may be difficult due to excellent cutting power
- Colored line on grip part of drill indicates diameter of drill and matching fixture size.
- Material: Stainless Steel (TrimRite®)

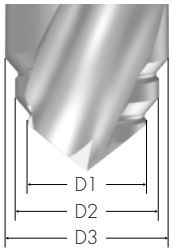

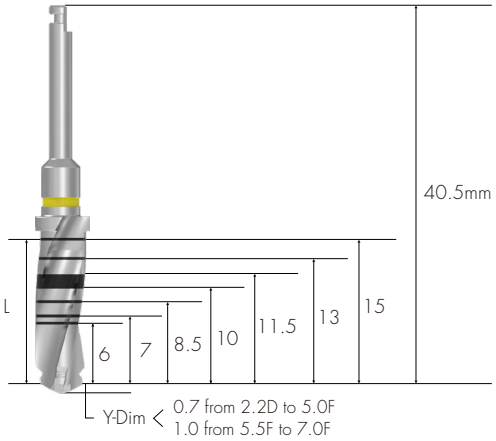

- Two kinds of step drill for X-Narrow (ZENEX PLUS I-System) & Narrow (ZENEX MULTI I-System) are included in the Kit.





L (mm) \ D1/D2/D3 (mm)	X-Narrow 3.0F (Ø2.2 / Ø2.5)	Narrow 3.0F (Ø2.2 / Ø2.7)
15.0	TD2F2515	TD2F2715

Step Drill

* Optional

L (mm) \ D1/D2/D3 (mm)	2.2D (Ø1.8 / Ø2.2)	3.5F (Ø2.2 / Ø3.0)	4.0F (Ø3.0 / Ø3.6)
6.0	TD2F2206 *	TD2F3006 *	TD2F3606 *
7.0	TD2F2207	TD2F3007	TD2F3607
8.5	TD2F2208	TD2F3008	TD2F3608
10.0	TD2F2210	TD2F3010	TD2F3610
11.5	TD2F2211	TD2F3011	TD2F3611
13.0	TD2F2213	TD2F3013	TD2F3613
15.0	TD2F2215 *	TD2F3015 *	TD2F3615 *
18.0	-	TD2F3018 *	TD2F3618 *
20.0	-	TD2F3020 *	TD2F3620 *

L (mm) \ D1/D2/D3 (mm)	4.5F (Ø3.0 / Ø3.6 / Ø4.1)	5.0F (Ø3.0 / Ø4.1 / Ø4.6)	5.5F (Ø4.6 / Ø5.2)
6.0	TD2F4106 *	TD2F4606 *	TD3F5206 *
7.0	TD2F4107	TD2F4607	TD3F5207
8.5	TD2F4108	TD2F4608	TD3F5208
10.0	TD2F4110	TD2F4610	TD3F5210
11.5	TD2F4111	TD2F4611	TD3F5211
13.0	TD2F4113	TD2F4613	TD3F5213
15.0	TD2F4115 *	TD2F4615 *	TD3F5215 *
18.0	TD2F4118 *	-	-
20.0	TD2F4120 *	-	-

ZENEX EASY SURGERY KIT Instruments

Cortical Drill

- Drill used for removing cortical bone from hard bone
- Drill to the bottom of each marking line
- The lower marking line is for drilling on normal bone and the upper marking line is for drilling on hard bone
- Material: Stainless Steel (TrimRite®)

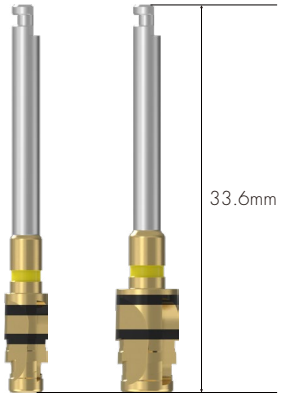

	3.0C (X-Narrow)	3.0C (Narrow)	3.5C	4.0C	4.5C	5.0C	5.5C
	CD3FXF30	CD3FNF30	CD4FF35	CD4FF40	CD4FF45	CD4FF50	CD4FF55
COLOR	None	Purple	Yellow	Green	Blue	Red	Yellow

Direction Pin

- Confirm gingiva height and path after implant placement
- DPSR4509: Available to use in case of ZENEX I-System (Regular & Wide) and ZENEX T-System (Regular & Wide)
- Material: Titanium alloy

I-System



	DPSX3510	DPSN3510	DPSM3510	DPSR4509
COLOR	Red	Purple	Green	Metal

- For ZENEX MULTI I-System (based on connection): Narrow, Mini, Regualr & Wide
- For ZENEX PLUS I-System (based on connection): X-Narrow, Mini, Regualr & Wide

T-System

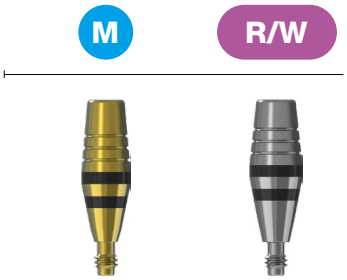

	DPTM4010	DPSR4509
COLOR	Yellow	Metal

R-System



	DPRR4009
COLOR	Blue

Parallel Pin

- Used for confirmation of drilling depth and path
- Available to use after drilling with Ø2.2 Drill and Ø3.0 drill
- Composition in the kit: PP352230 (1 ea) + PP402230 (2 ea)
- Material: Stainless Steel

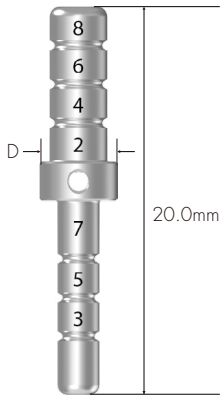

D (mm)	Ø3.5	Ø4.0	Ø5.0	Ø6.0
	PP352230	PP402230	PP502230	PP602230

Fixture Driver

- For Contra Angle: Directly attached to fixture by connecting to handpiece when using Implant motor
- For Wrench: Directly attached to fixure by using Torque Wrench
- Two-staged coloring enables measurement up to 5mm height at 1mm intervals
- Be sure to use after accurate connection because once used with incorrectly connected driver, it is impossible to remove fixture
- Be sure to use accurate fixture driver according to the system of fixture.

※ Fixture Driver for Narrow of ZENEX MULTI I-System: Same with Mini of ZENEX T-System (**Optional**)

- Material: Stainless Steel (TrimRite®)

I-System

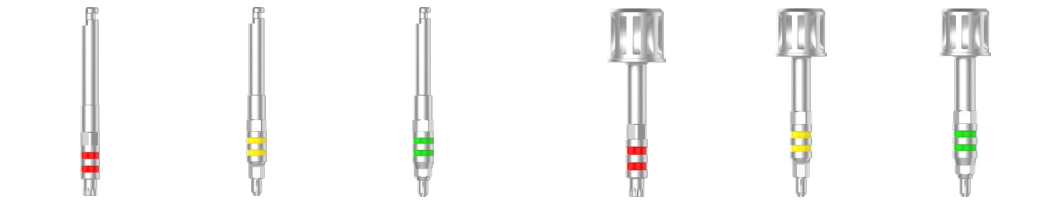

	Contra Angle			Wrench		
Short	FDCSX17S	FDCTM21S	FDCSR25S	FDRSX17S	FDRTM21S	FDRSR25S
Long	FDCSX17L	FDCTM21L	FDCSR25L	FDRSX17L	FDRTM21L	FDRSR25L
COLOR	Red	Yellow	Green	Red	Yellow	Green

- For ZENEX MULTI I-System (based on connection): Narrow, Mini, Regualr & Wide
- For ZENEX PLUS I-System (based on connection): X-Narrow, Mini, Regualr & Wide

ZENEX EASY SURGERY KIT Instruments

T-System

	Contra Angle		Wrench	
				
	M	R/W	M	R/W
Short	FDCTM21S	FDCTR25S	FDRTM21S	FDRTR25S
Long	FDCTM21L	FDCTR25L	FDRTM21L	FDRTR25L
COLOR	Yellow	Black	Yellow	Black

R-System

	Contra Angle	Wrench
		
	M/R/W	M/R/W
Short	FDCRR23S	FDRRR23S
Long	FDCRR23L	FDRRR23L
COLOR	Blue	Blue

1.2 Hex Driver

- Driver for connecting with Torque Wrench
- Used for connecting to cover screw and surgical instrument with 1.2 Hex
- Follow recommended tightening torque calculation value
- Be sure to check transformation of Hex tip before use
- Material: Stainless Steel+Titanium alloy

L (mm)	10.0	15.0
	HEDR1210	HEDR1215

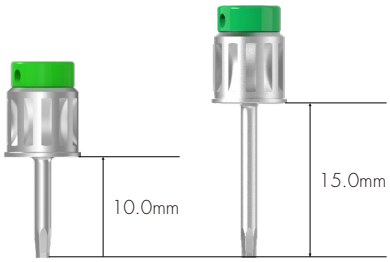

Torque Wrench

- Used for placing fixture and tightening implant abutments and screws
- Confirm torque calculation value by pulling the bar to be aligned with the marked line
- Recommended to use by pressing head to prevent detachment of Torque Wrench and surgical instruments
- Material: Stainless Steel



TW60B

ZENEX EASY SURGERY KIT Instruments

Depth Gauge

- Measuring drilling depth
- Measurable depth: 6~20mm
- Material: Titanium alloy

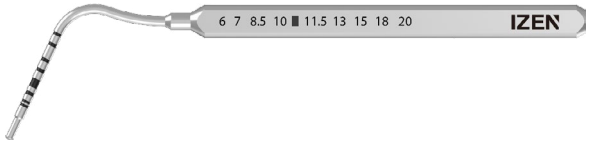

DG1720

Steel Bowl

- Used for cleaning surgery instruments
- Material: Stainless Steel



STBOWL

Drilling Sequence

Ø 3.5mm Fixture

(ZENEX MULTI & PLUS R-System Mini)

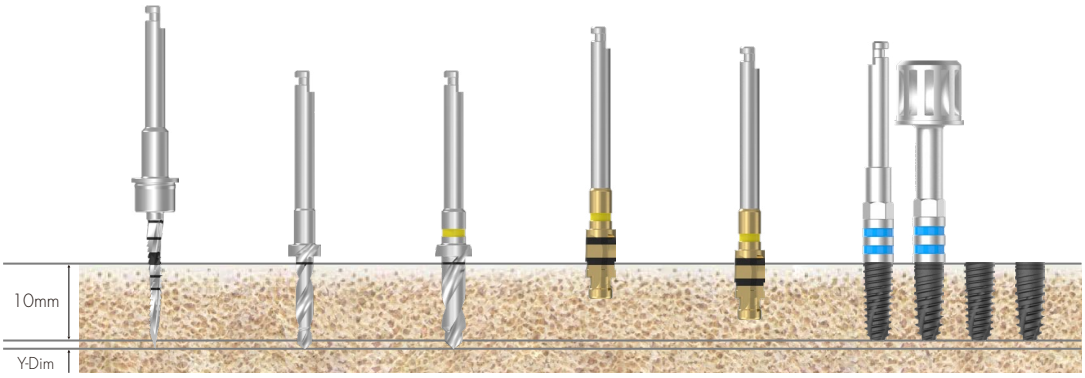

Bone Quality	Guide Drill	Step Drill (Ø2.2)	Step Drill (Ø3.0)	Cortical Drill (Lower Line)	Cortical Drill (Upper Line)	Ø3.5 Fixture
Soft	▶	▶	▶			Implant Placement
Normal	▶	▶	▶	▶		
Hard	▶	▶	▶		▶	

Ø 4.0mm Fixture

(ZENEX MULTI & PLUS R-System Regular)

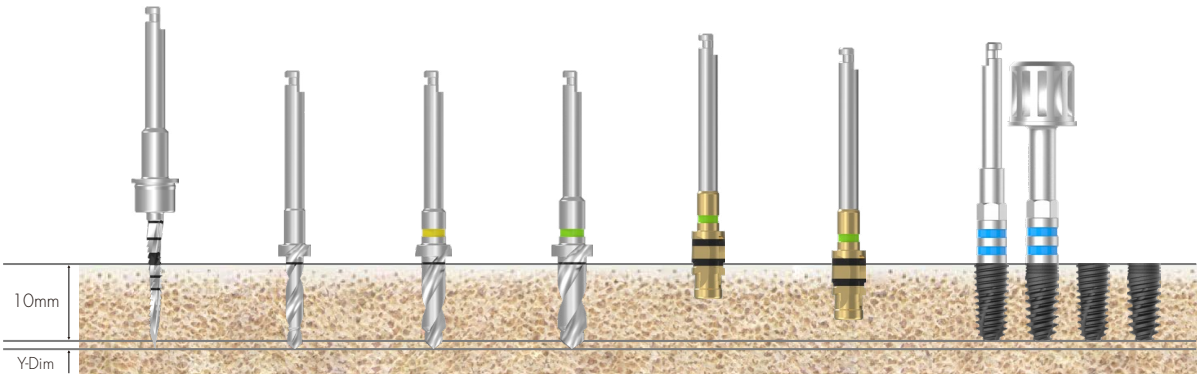

Bone Quality	Guide Drill	Step Drill (Ø2.2)	Step Drill (Ø3.0)	Step Drill (Ø3.6)	Cortical Drill (Lower Line)	Cortical Drill (Upper Line)	Ø4.0 Fixture
Soft	▶	▶	▶	▶			Implant Placement
Normal	▶	▶	▶	▶	▶		
Hard	▶	▶	▶	▶		▶	

Drilling Sequence

Ø 4.5mm Fixture

(ZENEX MULTI & PLUS R-System Regular)

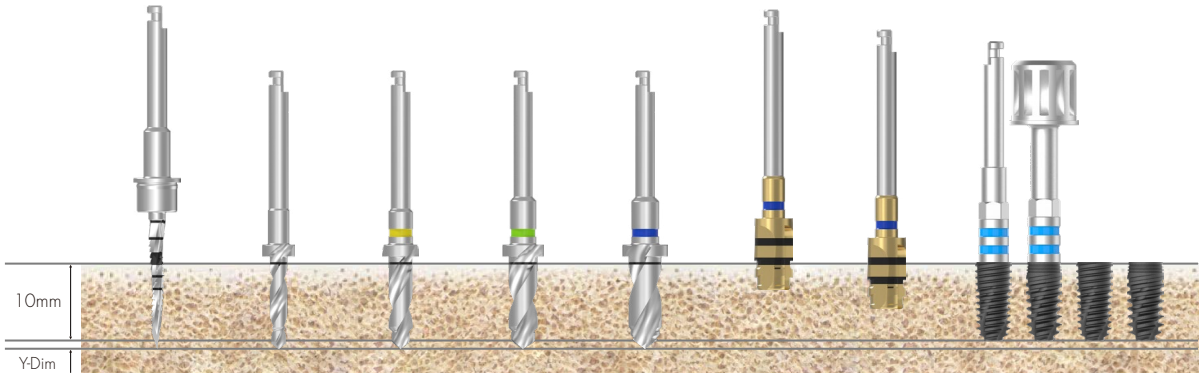

Bone Quality	Guide Drill	Step Drill (Ø2.2)	Step Drill (Ø3.0)	Step Drill (Ø3.6)	Step Drill (Ø4.1)	Cortical Drill (Lower Line)	Cortical Drill (Upper Line)	Ø4.5 Fixture
Soft	▶	▶	▶	▶	▶			
Normal	▶	▶	▶	▶	▶	▶		Implant Placement
Hard	▶	▶	▶	▶	▶		▶	

Ø 5.0mm Fixture

(ZENEX MULTI & PLUS R-System Wide)

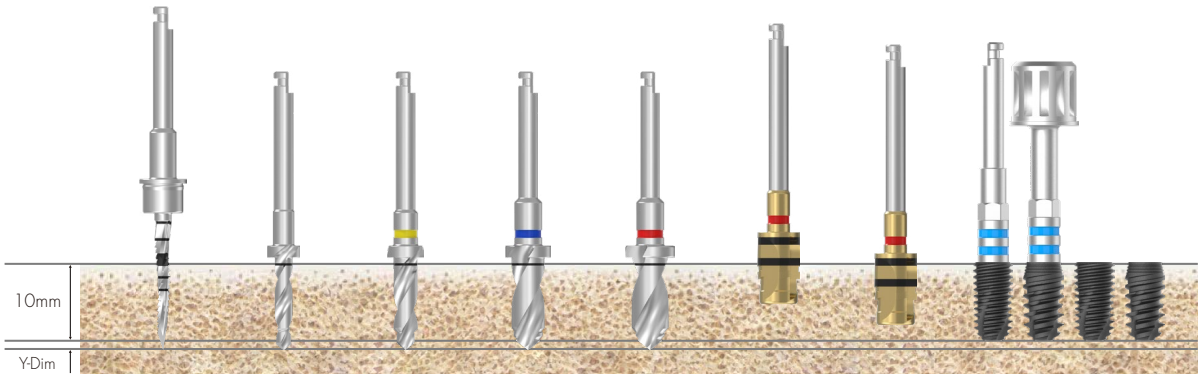

Bone Quality	Guide Drill	Step Drill (Ø2.2)	Step Drill (Ø3.0)	Step Drill (Ø4.1)	Step Drill (Ø4.6)	Cortical Drill (Lower Line)	Cortical Drill (Upper Line)	Ø5.0 Fixture
Soft	▶	▶	▶	▶	▶			
Normal	▶	▶	▶	▶	▶	▶		Implant Placement
Hard	▶	▶	▶	▶	▶		▶	

Drilling Sequence

Ø 5.5mm Fixture

(ZENEX MULTI & PLUS R-System Wide)

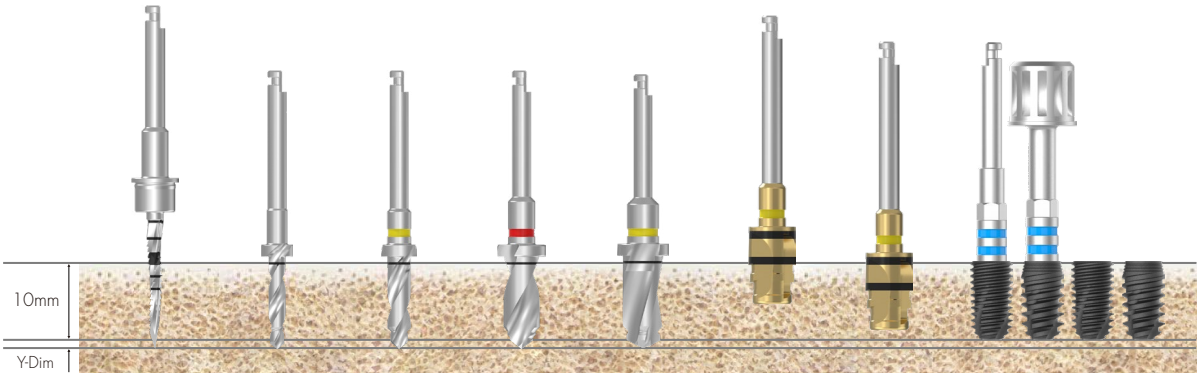

Bone Quality	Guide Drill	Step Drill (Ø2.2)	Step Drill (Ø3.0)	Step Drill (Ø4.6)	Step Drill (Ø5.2)	Cortical Drill (Lower Line)	Cortical Drill (Upper Line)	Ø5.5 Fixture
Soft	▶	▶	▶	▶	▶			
Normal	▶	▶	▶	▶	▶	▶		Implant Placement
Hard	▶	▶	▶	▶	▶		▶	

ZENEX SUPERWIDE KIT

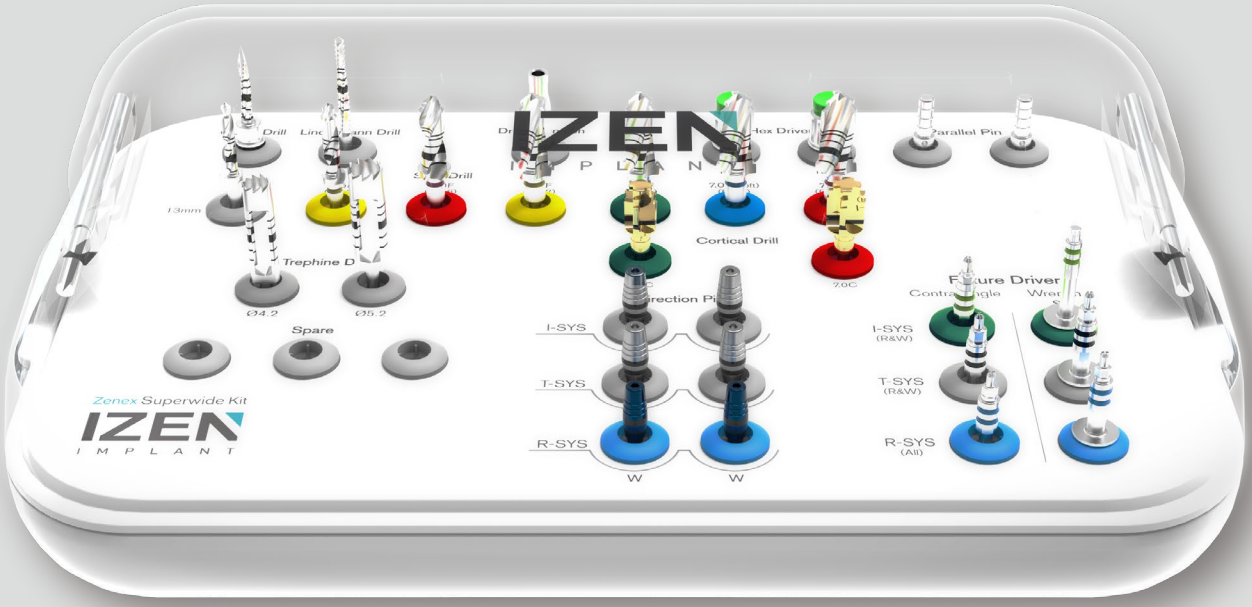

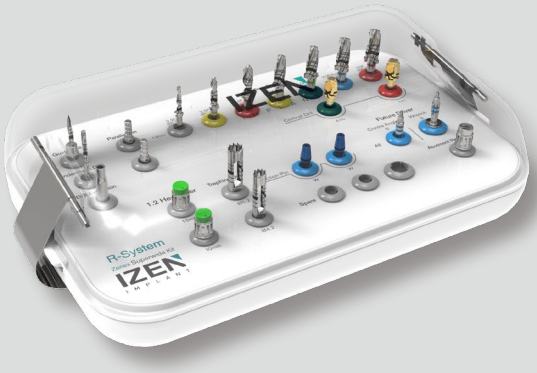

R-System

ZENEX SUPERWIDE KIT
(ZENSWKIT)

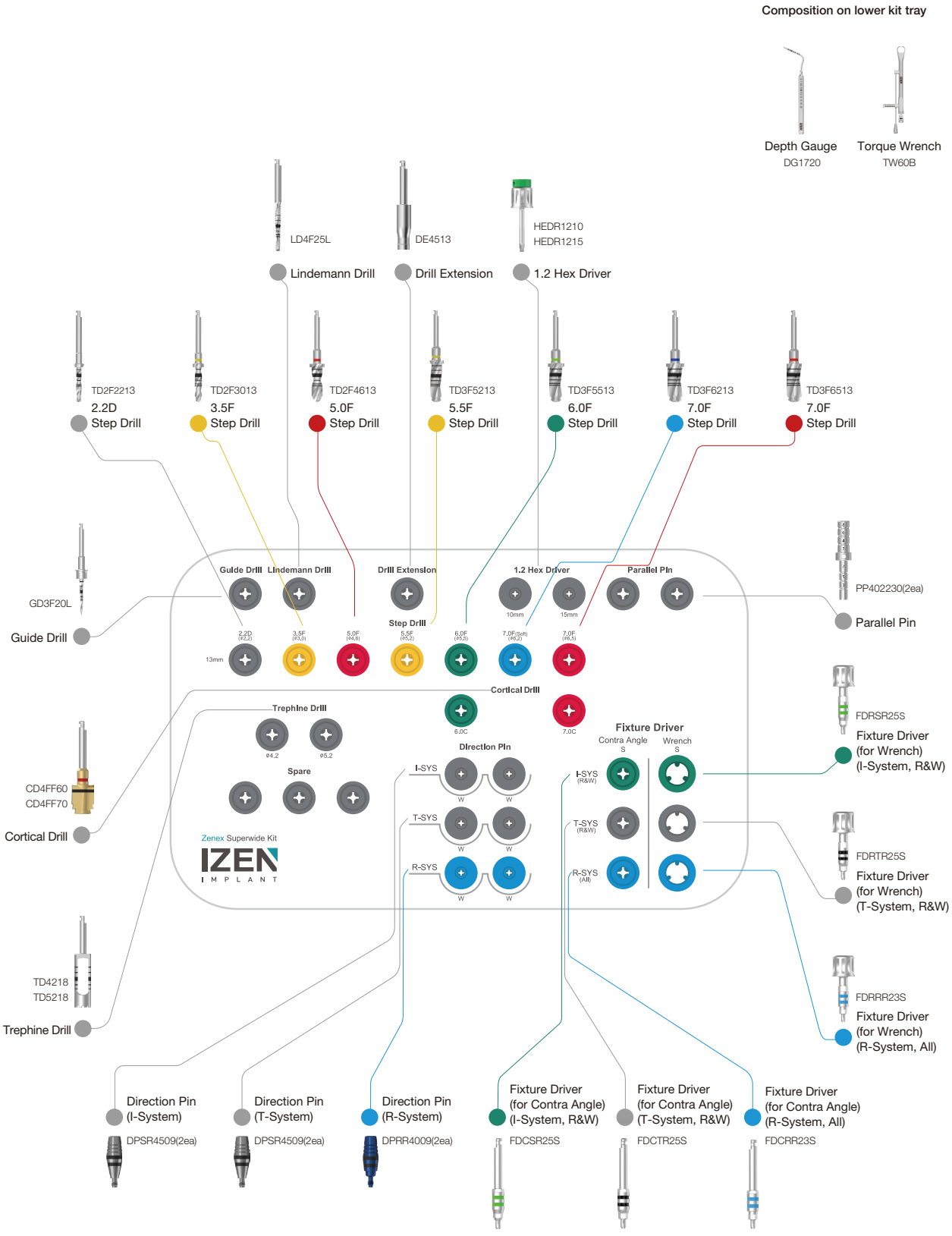

ZENEX SUPERWIDE KIT
R-System (ZENSWRKIT)

Composition on lower kit tray



Depth Gauge
DG1720

Torque Wrench
TW60B

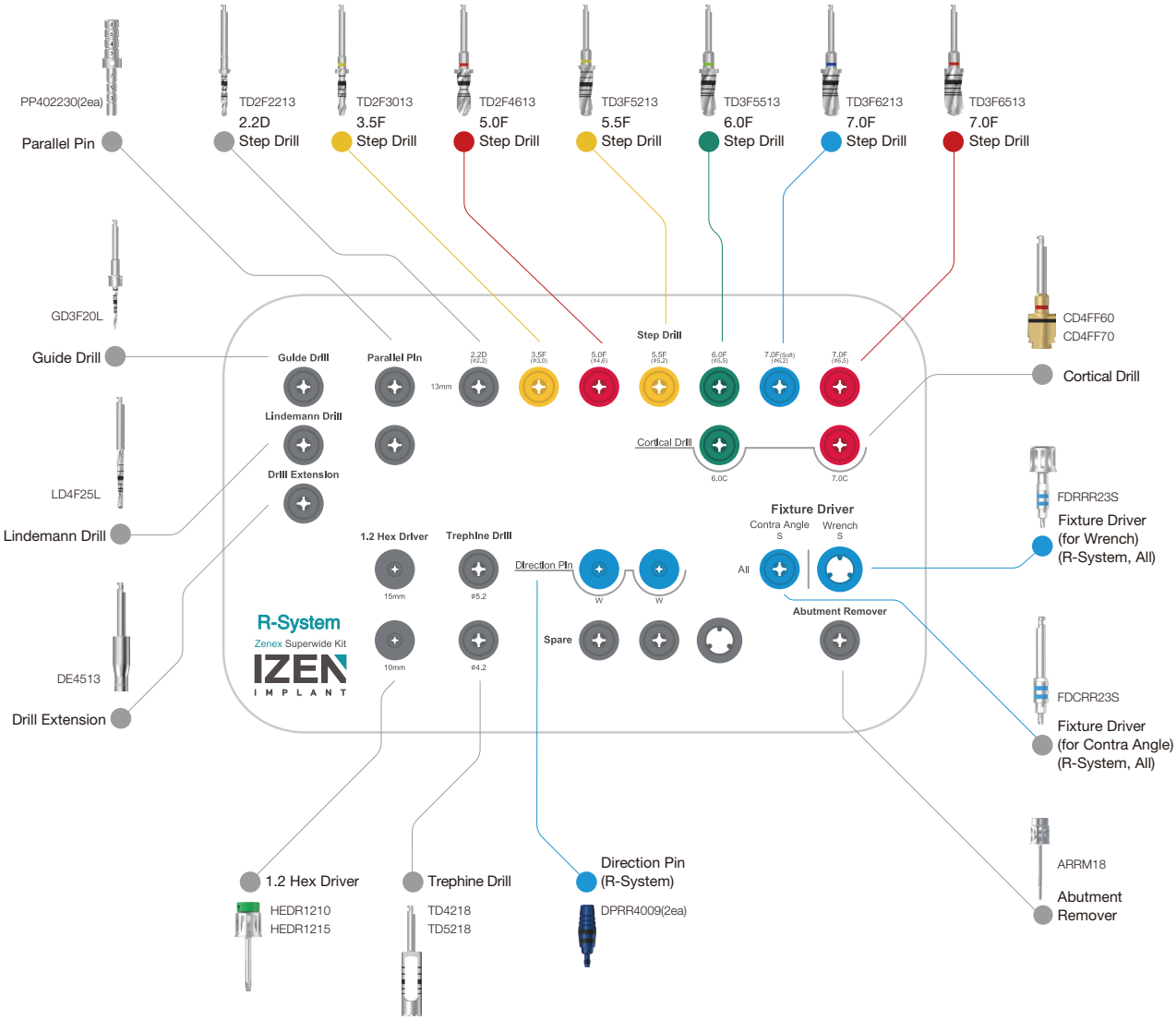

ZENEX SUPERWIDE KIT Instruments

Guide Drill

- Drill to mark base hole on the bone for easy initial drilling
- Available to control drilling depth by using with stopper
- Product Code in the Kit: GD3F20L
- Material: Stainless Steel (TrimRite®)

D1/D2 (mm)	Ø1.5 / Ø2.0
Short	GD3F20S
Long	GD3F20L

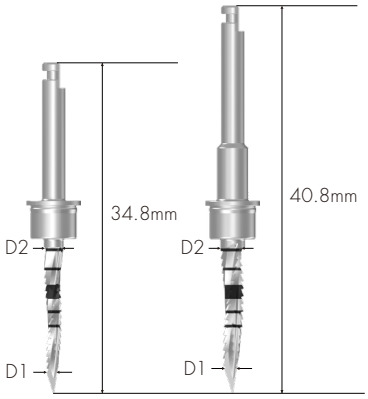

Short Long

Lindemann Drill

- Outward blades allow side cutting during drilling
- Available to use when removing ridge part of extraction socket
- Product Code in the Kit: LD4F25L
- Material: Stainless Steel (TrimRite®)

D1/D2 (mm)	Ø1.5 / Ø2.0	Ø2.0 / Ø2.5
Short	LD4F20S	LD4F25S
Long	LD4F20L	LD4F25L

D1/D2 (mm)	Ø3.0 / Ø3.5
Medium	LD4F35M

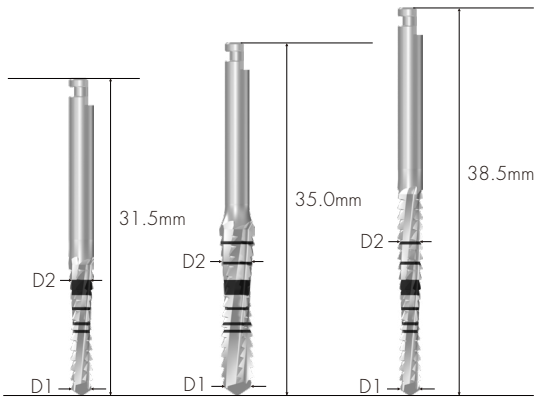

Short Medium Long

ZENEX SUPERWIDE KIT Instruments

Drill Extension

- Lengthen surgical instrument in use by connecting to drill and Implant motor
- Be sure to use after accurate connection to prevent product detachment or bending that connected to Drill Extension
- Material: Stainless Steel (TrimRite®) +Titanium alloy

DE4513

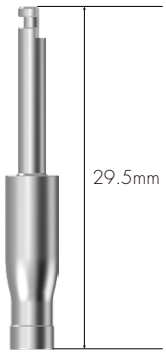

Step Drill

- Straight drill to shorten surgery steps
- As stopper is applied in the drill, secure to use although depth control may be difficult due to excellent cutting power
- Colored line on grip part of drill indicates diameter of drill and matching fixture size.
- The length of 13mm step drill is applied only in the kit.

※ TD3F6213: Only use for drilling on soft bone when Ø 7.0 fixture is placed.

- Material: Stainless Steel (TrimRite®)

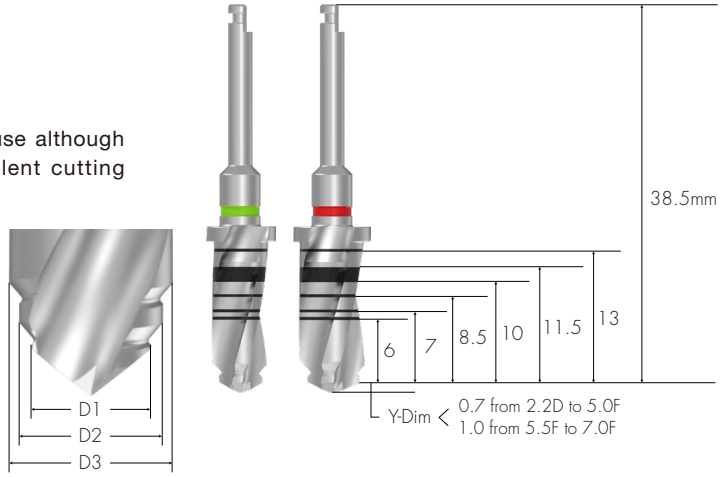

D1/D2/D3 (mm)	2.2D (Ø1.8 / Ø2.2)	3.5F (Ø2.2 / Ø3.0)	5.0F (Ø3.0 / Ø4.1 / Ø4.6)
	TD2F2213	TD2F3013	TD2F4613

D1/D2/D3 (mm)	5.5F (Ø4.6 / Ø5.2)	6.0F (Ø4.6 / Ø5.5)	7.0F (Ø5.5 / Ø6.2)
	TD3F5213	TD3F5513	TD3F6213

D1/D2/D3 (mm)	7.0F (Ø5.5 / Ø6.5)
	TD3F6513

Cortical Drill

- Drill used for removing cortical bone from hard bone
- Drill to the bottom of each marking line
- In case of Superwide fixture placement, use only for hard bone case.
- Material: Stainless Steel (TrimRite®)

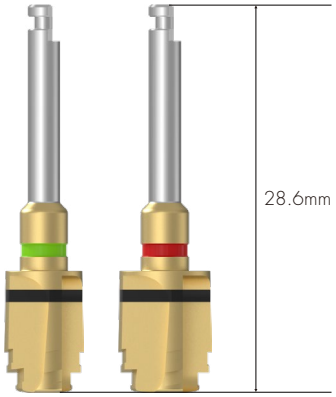

	6.0C	7.0C
	CD4FF60	CD4FF70
COLOR	Green	Red

Direction Pin

- Confirm gingiva height and path after implant placement
- DPSR4509: Available to use in case of ZENEX I-System (Regular & Wide) and ZENEX T-System (Regular & Wide)
- 2 pins of each system are included in the kit, in accordance with fixture system.
  The user may choose the product, matching with the system
- Material: Titanium alloy

I-System	T-System	R-System
		
DPSR4509	DPSR4509	DPRR4009
COLOR Metal	COLOR Metal	COLOR Blue

ZENEX SUPERWIDE KIT Instruments

Parallel Pin

- Used for confirmation of drilling depth and path
- Available to use after drilling with Ø2.2 Drill and Ø3.0 drill
- Composition in the kit: PP402230 (2 ea)
- Material: Stainless Steel

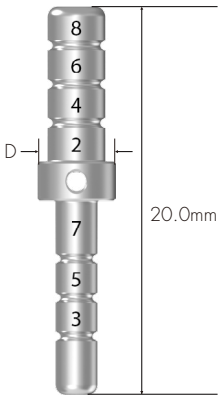

D (mm)	Ø3.5	Ø4.0	Ø5.0	Ø6.0
	PP352230	PP402230	PP502230	PP602230

Fixture Driver

- For Contra Angle: Directly attached to fixture by connecting to handpiece when using Implant motor
- For Wrench: Directly attached to fixure by using Torque Wrench
- Two-staged coloring enables measurement up to 5mm height at 1mm intervals
- Be sure to use after accurate connection because once used with incorrectly connected driver, it is impossible to remove fixture
- Be sure to use accurate fixture driver according to the system of fixture.
- Short type of fixture driver is included only
- Material: Stainless Steel (TrimRite®)

I-System ※ Only for I-System

	Contra Angle	Wrench
		
	M/R/W	M/R/W
Short	FDCSR25S	FDRSR25S
COLOR	Green	Green

T-System ※ Only for T-System

	Contra Angle	Wrench
		
	R/W	R/W
Short	FDCTR25S	FDRTR25S
COLOR	Black	Black

R-System ※ Only for R-System

	Contra Angle	Wrench
		
	M/R/W	M/R/W
Short	FDCRR23S	FDRRR23S
COLOR	Blue	Blue

1.2 Hex Driver

- Driver for connecting with Torque Wrench
- Used for connecting to cover screw and surgical instrument with 1.2 Hex
- Follow recommended tightening torque calculation value
- Be sure to check transformation of Hex tip before use
- Material: Stainless Steel+Titanium alloy

L (mm)	10.0	15.0
	HEDR1210	HEDR1215

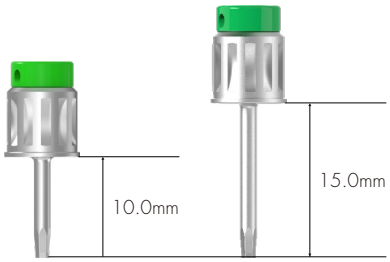

Torque Wrench

- Used for placing fixture and tightening implant abutments and screws
- Confirm torque calculation value by pulling the bar to be aligned with the marked line
- Recommended to use by pressing head to prevent detachment of Torque Wrench and surgical instruments
- Material: Stainless Steel



TW60B

Depth Gauge

- Measuring drilling depth
- Measurable depth: 6~20mm
- Material: Titanium alloy

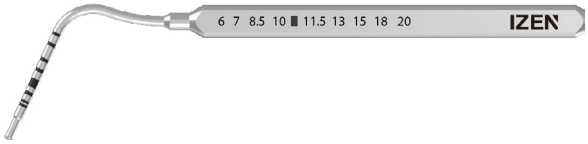

DG1720

Drilling Sequence

Ø 6.0mm Fixture

(ZENEX MULTI R-System Superwide)

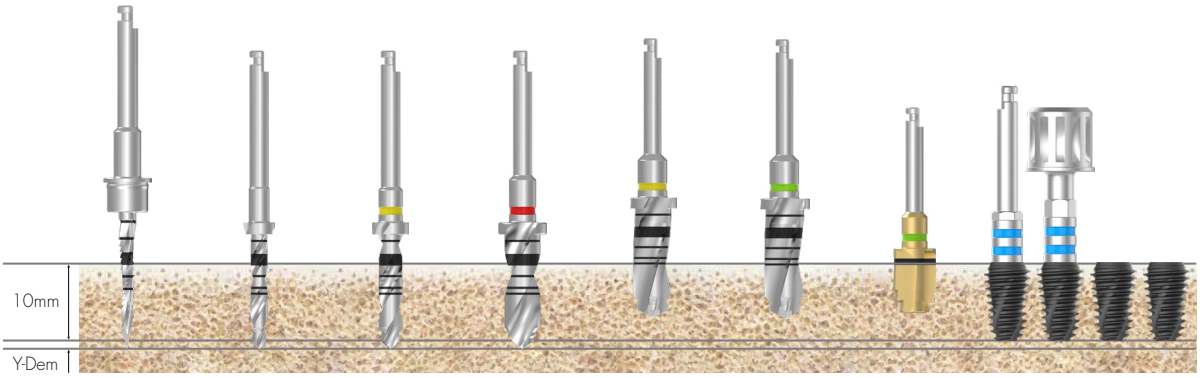

Bone Quality	Guide Drill	Step Drill (Ø2.2)	Step Drill (Ø3.0)	Step Drill (Ø4.6)	Step Drill (Ø5.2)	Step Drill (Ø5.5)	Cortical Drill	Ø6.0 Fixture
Soft	▶	▶	▶	▶	▶ (6mm)			
Normal	▶	▶	▶	▶		▶ (6mm)		Implant Placement
Hard	▶	▶	▶	▶		▶ (6mm)	▶	

Ø 7.0mm Fixture

(ZENEX MULTI R-System Superwide)

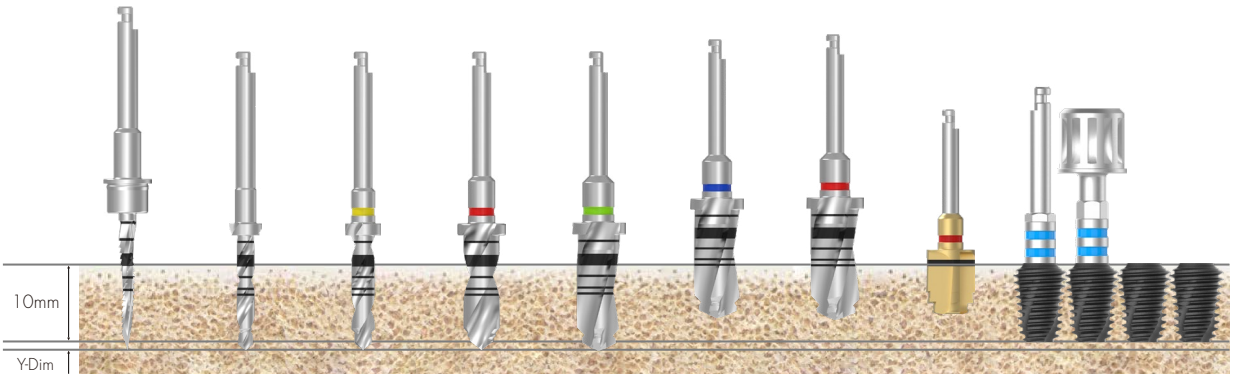

Bone Quality	Guide Drill	Step Drill (Ø2.2)	Step Drill (Ø3.0)	Step Drill (Ø4.6)	Step Drill (Ø5.5)	Step Drill (Ø6.2)	Step Drill (Ø6.5)	Cortical Drill	Ø7.0 Fixture
Soft	▶	▶	▶	▶	▶	▶ (6mm)			
Normal	▶	▶	▶	▶	▶		▶ (6mm)		Implant Placement
Hard	▶	▶	▶	▶	▶		▶ (6mm)	▶	

IZEN
IMPLANT

ZENEX PROSTHETIC KIT

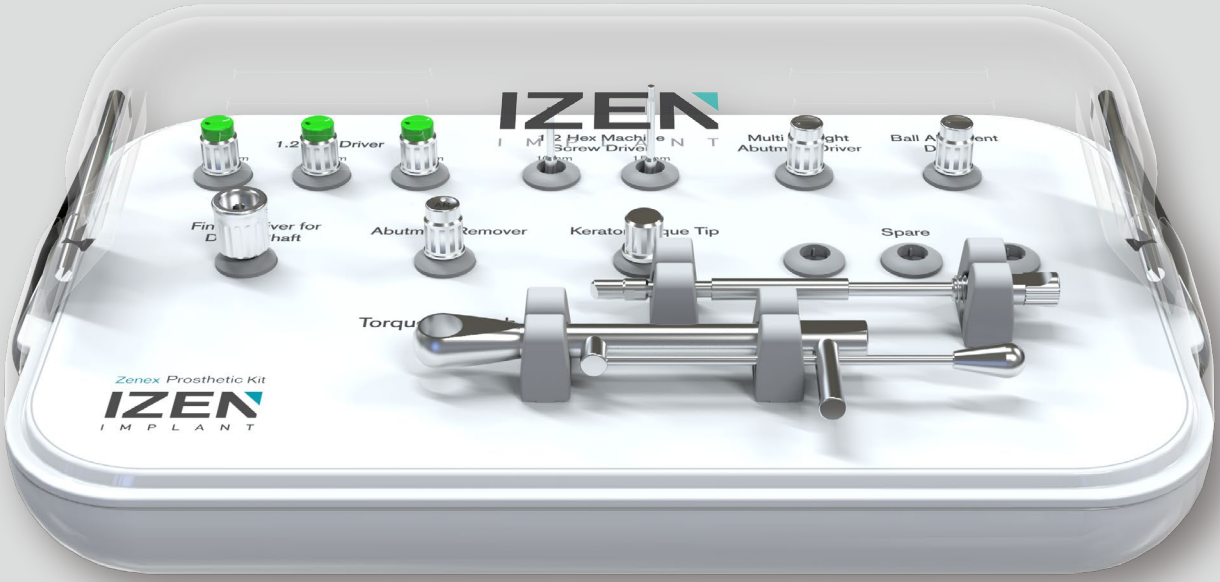

ZENEX PROSTHETIC KIT
(ZENPRKIT)

Composition on lower kit tray



Kerator Magic Tool
KMT002

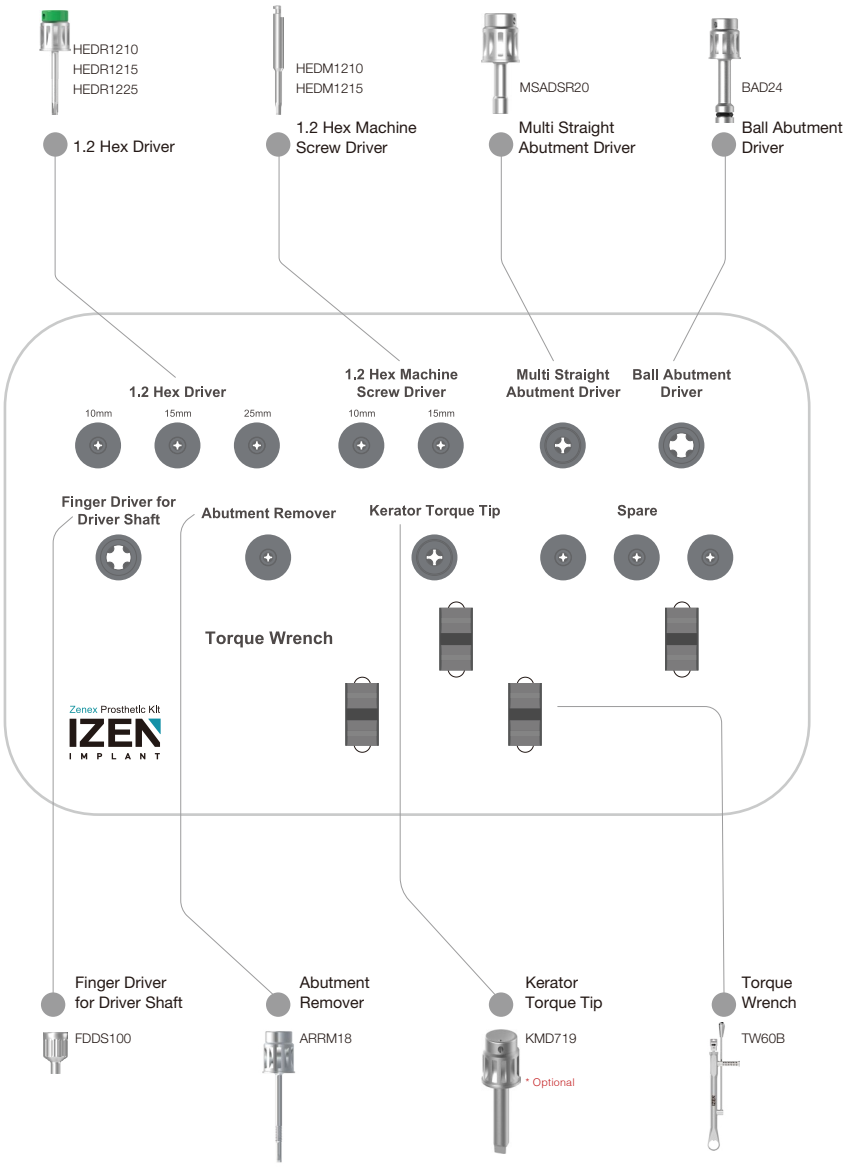

1.2 Hex Driver

- Driver for connecting with Torque Wrench
- Used for connecting to cover screw and surgical instrument with 1.2 Hex
- Follow recommended tightening torque calculation value
- Be sure to check transformation of Hex tip before use
- Material: Stainless Steel (TrimRite®) +Titanium alloy

L (mm)	10.0	15.0	25.0
	HEDR1210	HEDR1215	HEDR1225

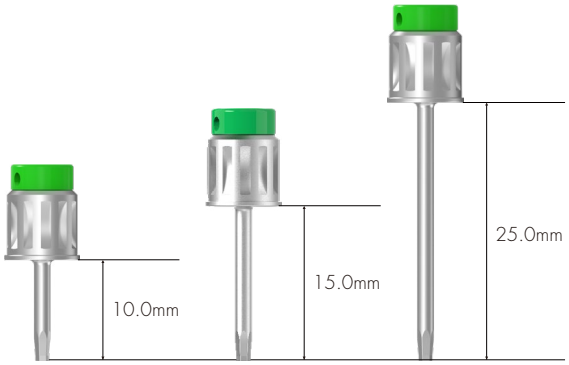

1.2 Hex Machine Screw Driver

- Driver for implant motor
- Implement holding instrument
- Available to use by hand when connected to Finger Driver for Driver Shaft
- Material: Stainless Steel (TrimRite®)

L (mm)	10.0	15.0
	HEDM1210	HEDM1215

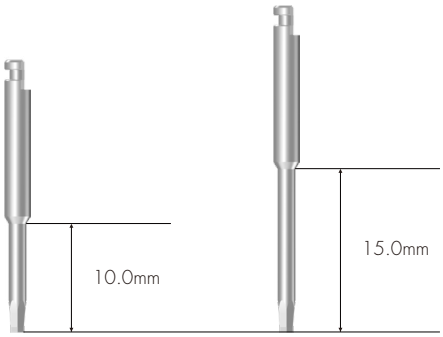

Abutment Remover

- Use for removing abutment when it is impossible to remove abutment by hands due to strong connection force.
- Remove Abutment by keep tightening the remover clockwise after removing abutment screw
- Material: Stainless Steel (TrimRite®) +Titanium alloy

※ R-System use only



ARRM18

Finger Driver for Driver Shaft

- Available to rotate with hand by connecting to every surgery instrument for motor
- Material: Stainless Steel (TrimRite®)



FDDS100

Ball Abutment Driver

- Torque driver for Ball Abutment
- Material: Stainless Steel (TrimRite®)+Titanium alloy+Silicone



BAD24

Multi Straight Abutment Driver

- Torque driver for Multi Straight Abutment
- Material: Stainless Steel (TrimRite®)+Titanium alloy



MSADSR20

Torque Wrench

- Used for placing fixture and tightening implant abutments and screws
- Confirm torque calculation value by pulling the bar to be aligned with the marked line
- Recommended to use by pressing head to prevent detachment of Torque Wrench and surgical instruments
- Material: Stainless Steel



TW60B

Kerator Magic Tool

- Use to connect and remove replacement male on denture cap
- As separated into two pieces, it is easy for maintenance (Optional)



KMH002

Kerator Torque Tip

- Torque driver for Kerator Abutment (Optional)

Round Type



KMD719

IZEN
IMPLANT

ZENEX GUIDE KIT

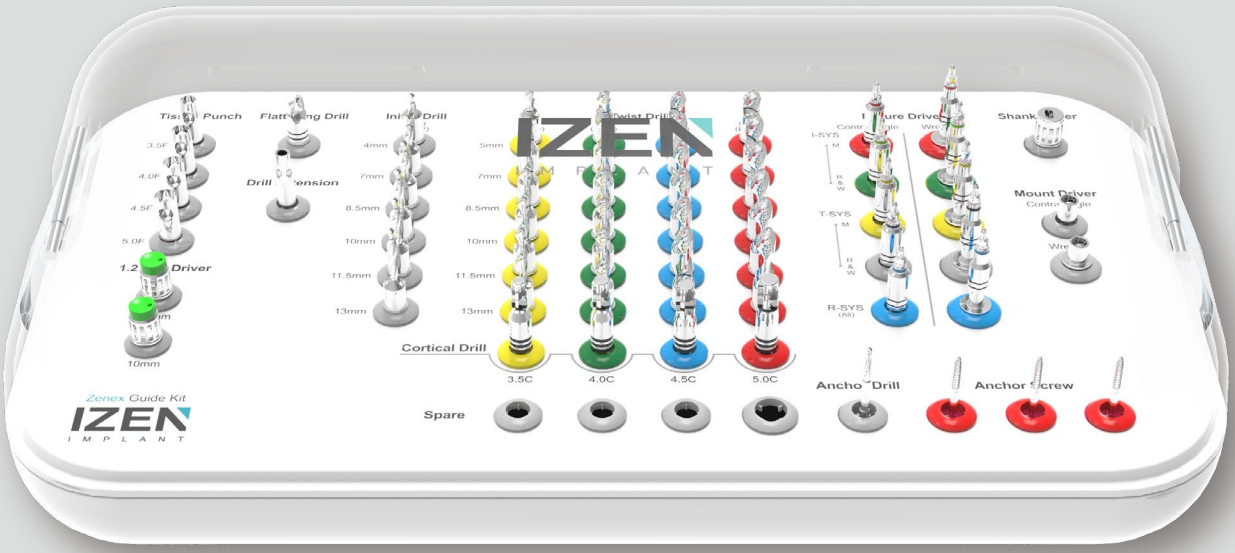



R-System

ZENEX GUIDE KIT (ZENGUKIT)

Composition on lower kit tray



Depth Gauge
DG1720

Torque Wrench
TW60B

Steel Bowl
STBOWL

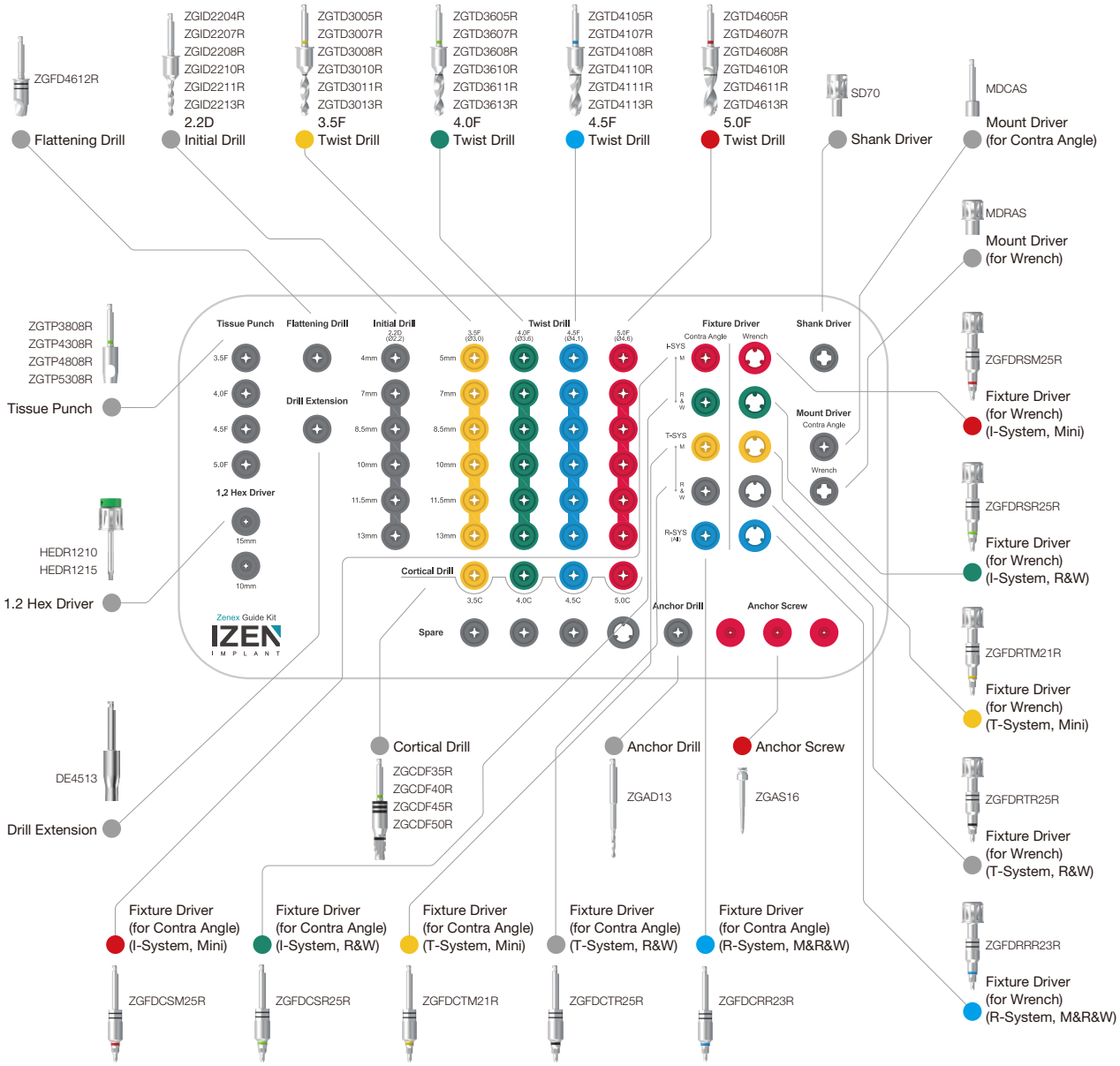

ZENEX GUIDE KIT
R-System (ZENGURKIT)

Composition on lower kit tray



Depth Gauge
DG1720

Torque Wrench
TW60B

Steel Bowl
STBOWL

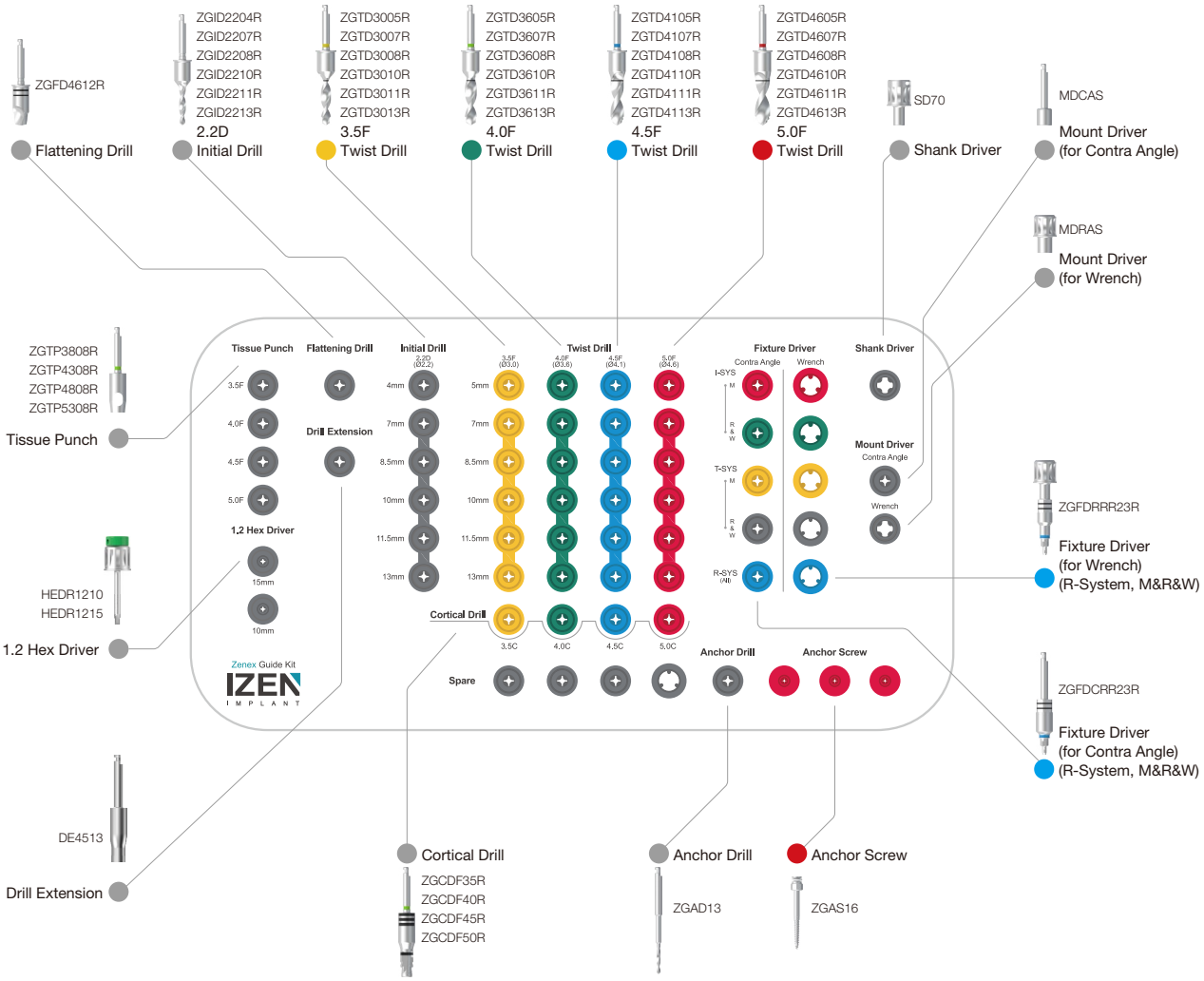

ZENEX GUIDE KIT Instruments

ZENEX Guide Tissue Punch

- Drill used for removing gingiva when using Surgical Guide
- Recommended speed: 1,200~1,500rpm
- Material: Stainless Steel (TrimRite®)
- Offest : 9mm, 10.5mm, 12mm



Fixture (Regular)	F3.5	F4.0	F4.5	F5.0
Tissue Punch	ZGTP3808R	ZGTP4308R	ZGTP4808R	ZGTP5308R
Diameter (mm)	Ø3.8	Ø4.3	Ø4.8	Ø5.3
Color	Yellow	Green	Blue	Red

ZENEX Guide Flattening Drill

- Used for narrow or uneven ridges
- Recommended to use before Initial Drill
- Stable cutting without splashing with multiple cutting edges
- Recommended speed: 1,200~1,500rpm
- There are products for each offset.
- Recommended to use offset-specific products for safety.
- Product Code in the Kit : ZGFD4612R
- Material: Stainless Steel (TrimRite®)

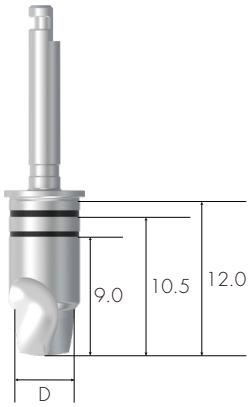

* Optional

Fixture (Regular)	F3.5	F4.0	F4.5	F5.0
Drill (Offset)		ZGFD4609R* (9mm)	ZGFD4610R* (10.5mm)	ZGFD4612R (12mm)
Diameter (mm)		Ø4.6		

ZENEX GUIDE KIT Instruments

Drill Extension

- Lengthen surgical instrument in use by connecting to drill and Implant motor
- Be sure to use after accurate connection to prevent product detachment or bending that connected to Drill Extension
- Material: Stainless Steel (TrimRite®) +Titanium alloy

DE4513

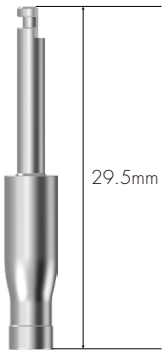

ZENEX Guide Initial Drill

- Drill to mark base hole on the bone for easy initial drilling after Tissue Punch when using Surgical Guide
- Recommended speed: 1,200~1,500rpm
- Material: Stainless Steel (TrimRite®)

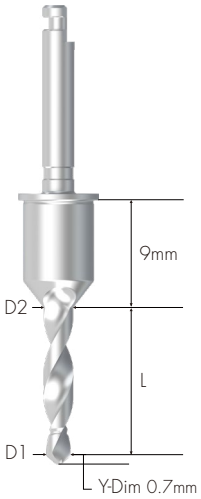

* Optional

L (mm) \ Fixture (Regular)	F3.5	F4.0	F4.5	F5.0
4.0		ZGID2204R		
7.0		ZGID2207R		
8.5		ZGID2208R		
10.0		ZGID2210R		
11.5		ZGID2211R		
13.0		ZGID2213R		
15.0		ZGID2215R*		
Diameter D1/D2 (mm)		Ø 1.8 / 2.2		

ZENEX Guide Twist Drill

- Straight drill to shorten surgery steps when using Surgical Guide
- Recommended speed: 1,200~1,500rpm
- Material: Stainless Steel (TrimRite®)

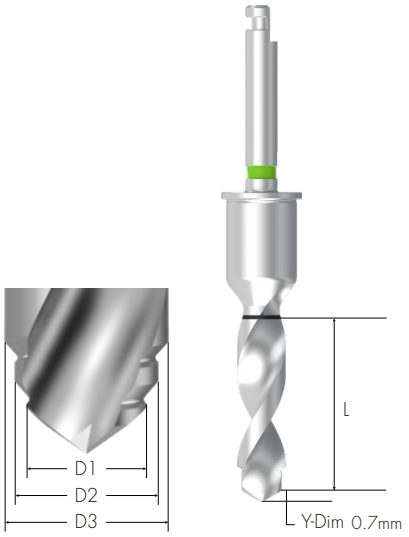

* Optional

L (mm) \ Fixture (Regular)	F3.5	F4.0	F4.5	F5.0
5.0	ZGTD3005R	ZGTD3605R	ZGTD4105R	ZGTD4605R
7.0	ZGTD3007R	ZGTD3607R	ZGTD4107R	ZGTD4607R
8.5	ZGTD3008R	ZGTD3608R	ZGTD4108R	ZGTD4608R
10.0	ZGTD3010R	ZGTD3610R	ZGTD4110R	ZGTD4610R
11.5	ZGTD3011R	ZGTD3611R	ZGTD4111R	ZGTD4611R
13.0	ZGTD3013R	ZGTD3613R	ZGTD4113R	ZGTD4613R
15.0	ZGTD3015R*	ZGTD3615R*	ZGTD4115R*	ZGTD4615R*
Diameter D1/D2/D3 (mm)	Ø 2.2 / 3.0	Ø 3.0 / 3.6	Ø 3.0 / 3.6 / 4.1	Ø 3.0 / 4.1 / 4.6
Color	Yellow	Green	Blue	Red

ZENEX GUIDE KIT Instruments

ZENEX Guide Cortical Drill

- Drill used for removing cortical bone from hard bone when using Surgical Guide
- Recommended speed: 500~800rpm
- Material: Stainless Steel (TrimRite)

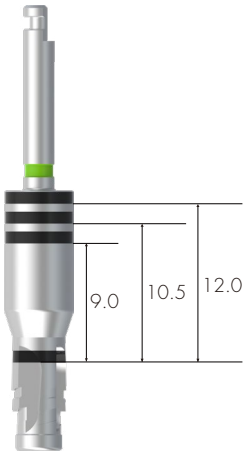

Fixture (Regular)	F3.5	F4.0	F4.5	F5.0
Drill	ZGCDF35R	ZGCDF40R	ZGCDF45R	ZGCDF50R
Color	Yellow	Green	Blue	Red

ZENEX Guide Fixture Driver

- For Contra Angle: Directly attached to fixture by connecting to handpiece when using Implant motor
- For Wrench: Directly attached to fixture by using Torque Wrench
- Recommended speed: 20rpm
- Separate kits for each system contain only the drivers for that system.
  (I-System Kit Code: ZENGUSKIT, T-System Kit Code: ZENGUTKIT, R-System Kit Code: ZENGURKIT)
- Material: Stainless Steel (TrimRite®)

I-System

	Contra Angle				Wrench			
Fixture (Regular)	F3.5		F4.0	F4.5	F5.0	F3.5	F4.0	F4.5	F5.0
	ZGFDCSM25R		ZGFDCSR25R			ZGFDRSM25R	ZGFDRSR25R		

T-System

Contra Angle





Fixture (Regular)	F3.5	F4.0	F4.5	F5.0
	ZGFDCTM21R	ZGFDCTR25R		

Wrench





Fixture (Regular)	F3.5	F4.0	F4.5	F5.0
	ZGFDRTM21R	ZGFDRTR25R		

R-System

Contra Angle



Fixture (Regular)	F3.5	F4.0	F4.5	F5.0
	ZGFDCRR23R			

Wrench



Fixture (Regular)	F3.5	F4.0	F4.5	F5.0
	ZGFDRRR23R			

ZENEX GUIDE KIT Instruments

ZENEX Guide Anchor Drill

- Used for drilling before using Anchor Screw
- Recommended speed: 1,200~1,500rpm
- Material: Stainless Steel (TrimRite®)



ZGAD13

ZENEX Guide Anchor Screw

- Used to firmly fix Surgical Guide (ex. edentulous case)
- Optional application at the procedure planning stage
- Connected with Mount Driver (MDCAS/MDRAS)
- Recommended speed: Less than 50rpm
- Material: Titanium alloy + Silicone



ZGAS16

Mount Driver

- Used by fastening to Anchor Screw during Guide procedure
- Recommended speed: 20rpm
- Material: Stainless Steel (TrimRite®)

* Optional

	Contra Angle	Wrench
		
Regular		
Short	MDCAS	MDRAS
Long	MDCAL*	MDRAL*

Shank Driver

- It is connected to the fixture driver for contra angle and used by hand or connected to the torque wrench to install or remove the fixture.
- Material: Stainless Steel (TrimRite®)



SD70

ZENEX GUIDE KIT Instruments

1.2 Hex Driver

- Driver for connecting with Torque Wrench
- Used for connecting to cover screw and surgical instrument with 1.2 Hex
- Follow recommended tightening torque calculation value
- Be sure to check transformation of Hex tip before use
- Material: Stainless Steel+Titanium alloy

L (mm)	10.0	15.0
	HEDR1210	HEDR1215

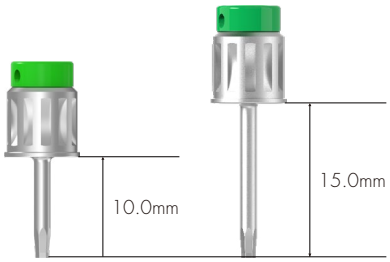

Torque Wrench

- Used for placing fixture and tightening implant abutments and screws
- Confirm torque calculation value by pulling the bar to be aligned with the marked line
- Recommended to use by pressing head to prevent detachment of Torque Wrench and surgical instruments
- Material: Stainless Steel



TW60B

Depth Gauge

- Measuring drilling depth
- Measurable depth: 6~20mm
- Material: Titanium alloy

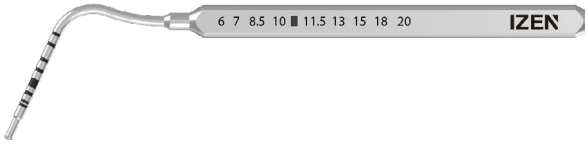

DG1720

Steel Bowl

- Used for cleaning surgery instruments
- Material: Stainless Steel



STBOWL

Drilling Protocol

Regular

		Initial Drill (Ø2.2)	Twist Drill				Cortical Drill
			F3.5 (Ø3.0)	F4.0 (Ø3.6)	F4.5 (Ø4.1)	F5.0 (Ø4.6)	Normal/Hard
							
 **F3.5**	Soft	●	●				
	Normal/Hard	●	●				●
 **F4.0**	Soft	●	●	●			
	Normal/Hard	●	●	●			●
 **F4.5**	Soft	●	●	●	●		
	Normal/Hard	●	●	●	●		●
 **F5.0**	Soft	●	●	●	●	●	
	Normal/Hard	●	●	●	●	●	●

Drilling Sequence

Ø 3.5mm Fixture

(ZENEX MULTI & PLUS R-System Mini)

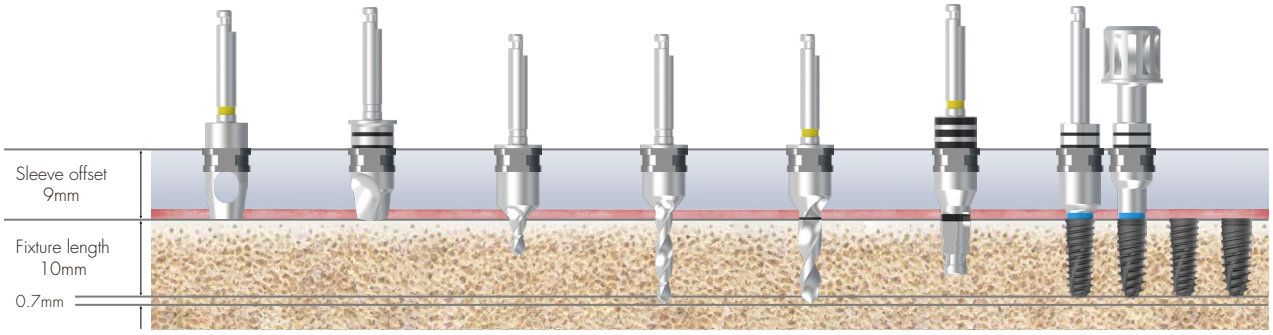

Bone Quality	Tissue Punch	Flattening Drill	Initial Drill (Ø2.2)	Initial Drill (Ø2.2)	Twist Drill (Ø3.0)	Cortical Drill	Ø3.5 Fixture
Soft	▶	(▶)	▶	▶	▶		Implant Placement
Normal / Hard	▶	(▶)	▶	▶	▶	▶	

Select Twist Drill (Product code: ZGTD3005R) according to the situation (optional)

Ø 4.0mm Fixture

(ZENEX MULTI & PLUS R-System Regular)

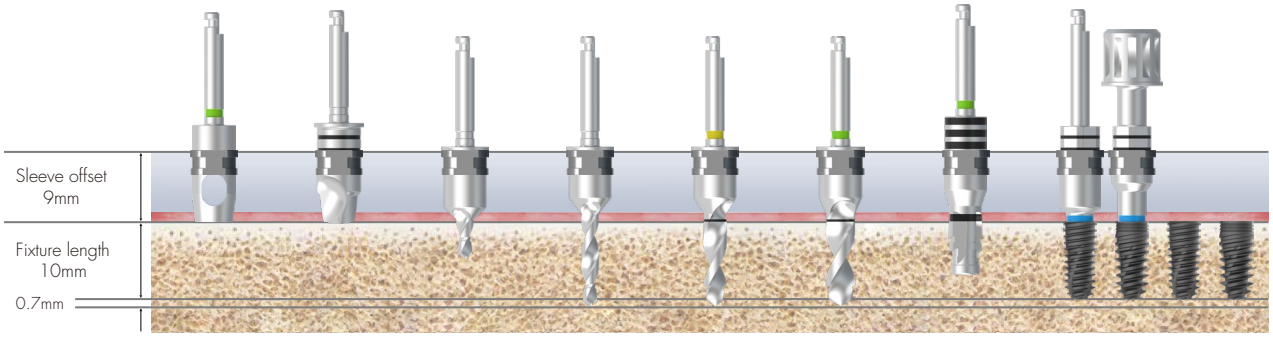

Bone Quality	Tissue Punch	Flattening Drill	Initial Drill (Ø2.2)	Initial Drill (Ø2.2)	Twist Drill (Ø3.0)	Twist Drill (Ø3.6)	Cortical Drill	Ø4.0 Fixture
Soft	▶	(▶)	▶	▶	▶	▶		Implant Placement
Normal / Hard	▶	(▶)	▶	▶	▶	▶	▶	

Select Twist Drill (Product code: ZGTD3005R, ZGTD3605R) according to the situation (optional)

Drilling Sequence

Ø 4.5mm Fixture

(ZENEX MULTI & PLUS R-System Regular)

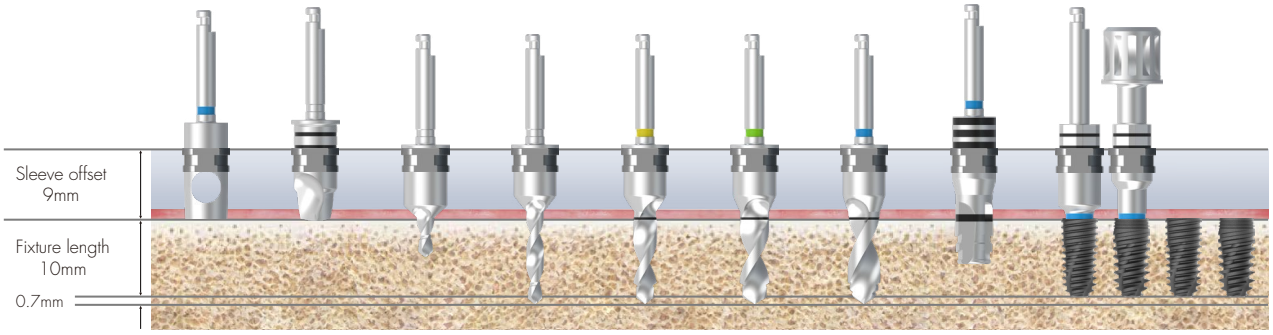

Bone Quality	Tissue Punch	Flattening Drill	Initial Drill (Ø2.2)	Initial Drill (Ø2.2)	Twist Drill (Ø3.0)	Twist Drill (Ø3.6)	Twist Drill (Ø4.1)	Cortical Drill	Ø4.5 Fixture
Soft	▶	(▶)	▶	▶	▶	▶	▶		Implant Placement
Normal / Hard	▶	(▶)	▶	▶	▶	▶	▶	▶	

Select Twist Drill (Product code: ZGTD3005R, ZGTD3605R, ZGTD4105R) according to the situation (optional)

Ø 5.0mm Fixture

(ZENEX MULTI & PLUS R-System Wide)

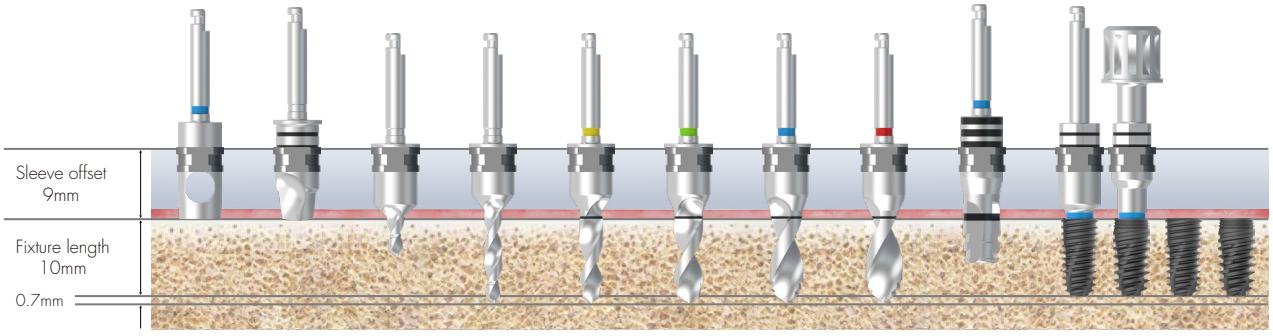

Bone Quality	Tissue Punch	Flattening Drill	Initial Drill (Ø2.2)	Initial Drill (Ø2.2)	Twist Drill (Ø3.0)	Twist Drill (Ø3.6)	Twist Drill (Ø4.1)	Twist Drill (Ø4.6)	Cortical Drill	Ø5.0 Fixture
Soft	▶	(▶)	▶	▶	▶	▶	▶	▶		Implant Placement
Normal / Hard	▶	(▶)	▶	▶	▶	▶	▶	▶	▶	

Select Twist Drill (Product code: ZGTD3005R, ZGTD3605R, ZGTD4105R, ZGTD4605R) according to the situation (optional)

IZEN
IMPLANT

ZENEX GUIDE MINI KIT

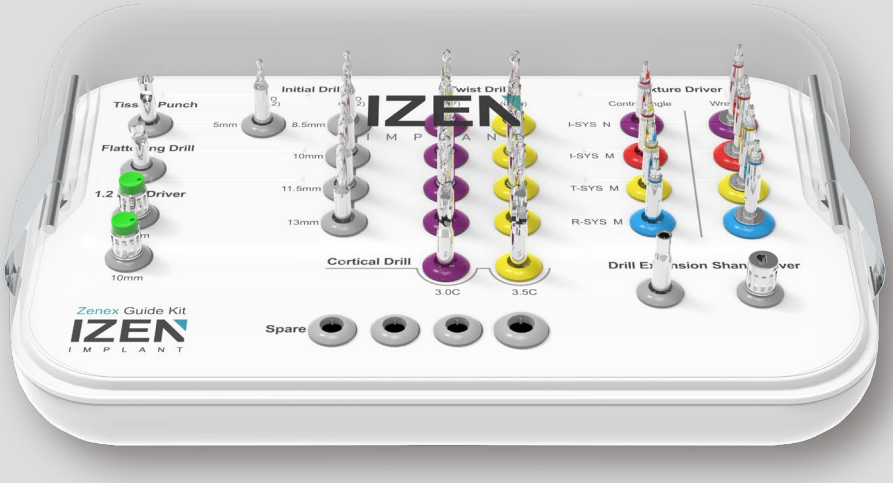



R-System

ZENEX GUIDE MINI KIT
(ZENGMKIT)

Composition on lower kit tray

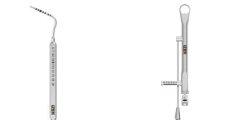

Depth Gauge
DG1720

Torque Wrench
TW60B

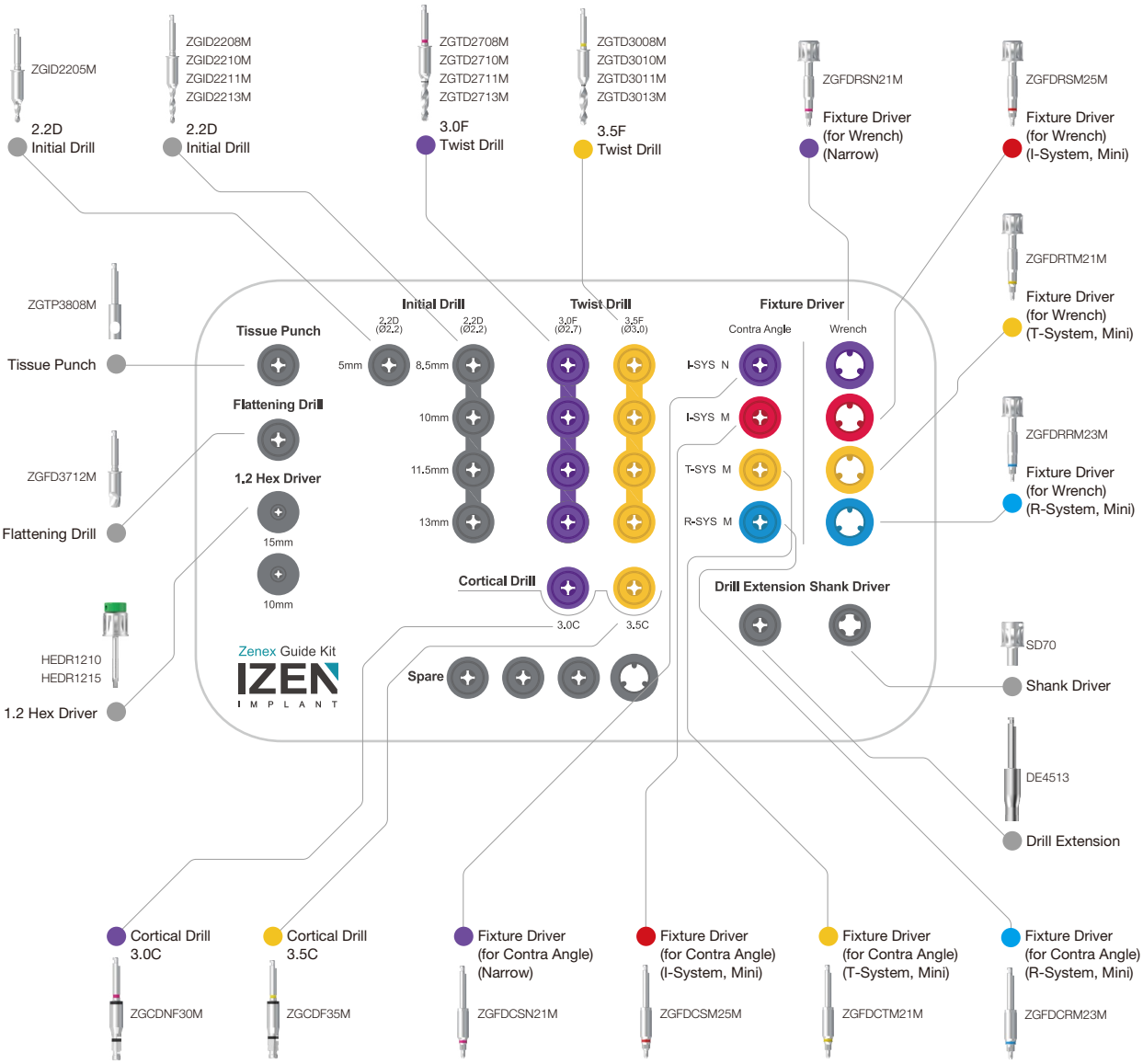

ZENEX GUIDE MINI KIT
R-System (ZENGMRKIT)

Composition on lower kit tray

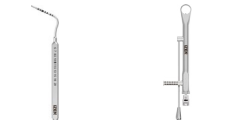

Depth Gauge
DG1720

Torque Wrench
TW60B

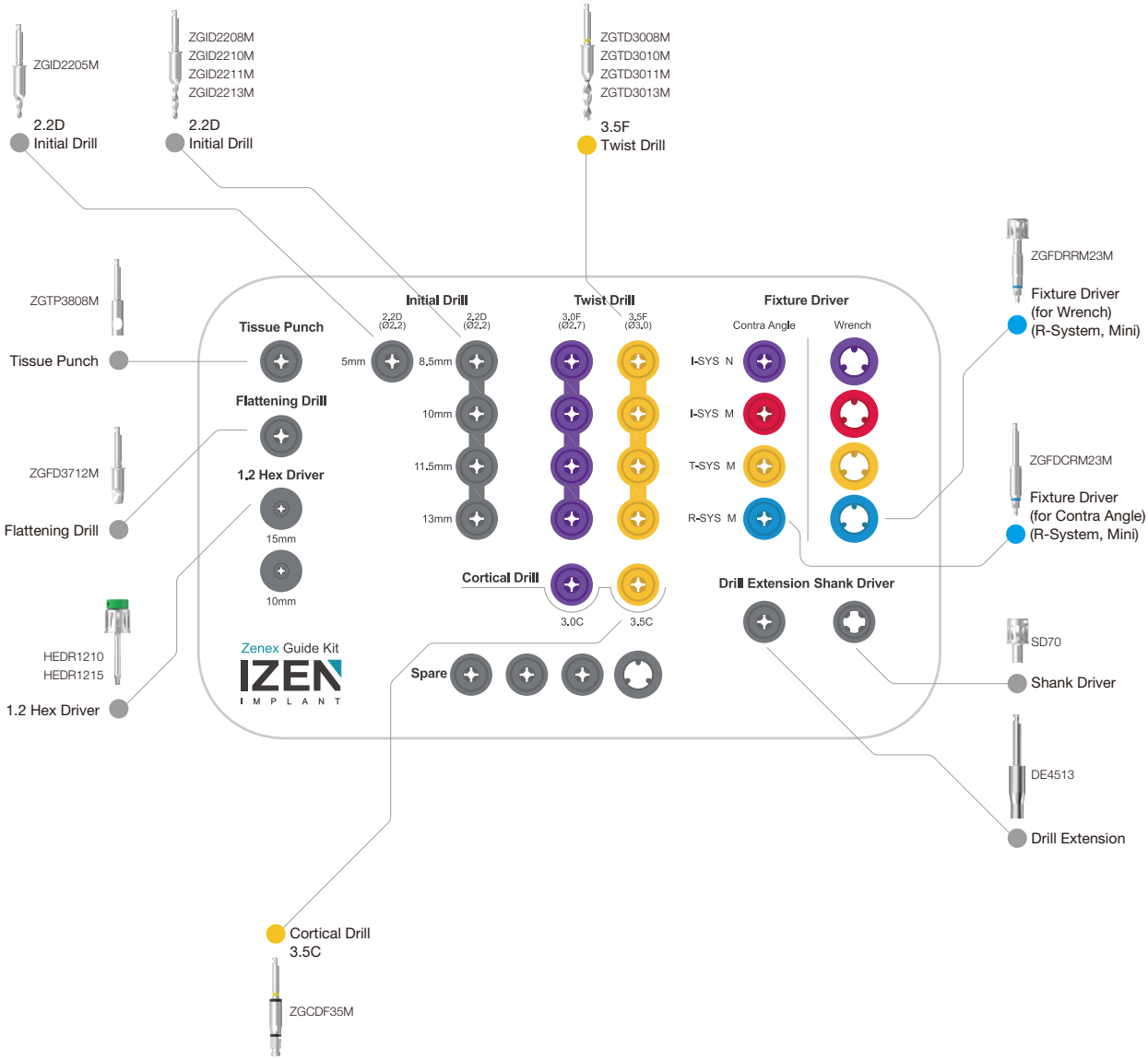

ZENEX GUIDE MINI KIT Instruments

ZENEX Guide Tissue Punch

- Drill used for removing gingiva when using Surgical Guide
- Recommended speed: 1,200~1,500rpm
- Material: Stainless Steel (TrimRite®)
- Offest : 12mm

Fixture	F3.0 (Narrow)	F3.5 (Mini)
Tissue Punch	ZGTP3808M	
Diameter (mm)	Ø3.8	
Color	Metal	



ZENEX Guide Flattening Drill

- Used for narrow or uneven ridges
- Recommended to use before Initial Drill
- Stable cutting without splashing with multiple cutting edges
- Recommended speed: 1,200~1,500rpm
- Material: Stainless Steel (TrimRite®)

Fixture	F3.0 (Narrow)	F3.5 (Mini)
Drill (Offset)	ZGFD3712M (12mm)	
Diameter (mm)	Ø3.7	
Color	Metal	

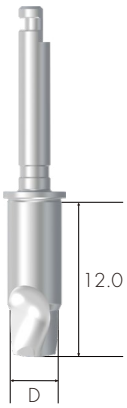

ZENEX GUIDE MINI KIT Instruments

Drill Extension

- Lengthen surgical instrument in use by connecting to drill and Implant motor
- Be sure to use after accurate connection to prevent product detachment or bending that connected to Drill Extension
- Material: Stainless Steel (TrimRite®) +Titanium alloy

DE4513

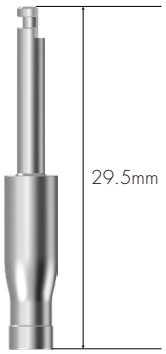

ZENEX Guide Initial Drill

- Drill to mark base hole on the bone for easy initial drilling after Tissue Punch when using Surgical Guide
- Recommended speed: 1,200~1,500rpm
- Material: Stainless Steel (TrimRite®)

* Optional

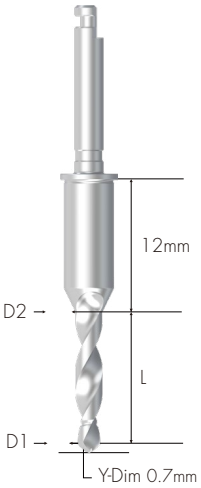

L (mm) \ Fixture	F3.0 (Narrow)	F3.5 (Mini)
5.0	ZGID2205M	
7.0	-	
8.5	ZGID2208M	
10.0	ZGID2210M	
11.5	ZGID2211M	
13.0	ZGID2213M	
15.0	ZGID2215M*	
Diameter D1/D2 (mm)	Ø 1.8 / 2.2	

ZENEX Guide Twist Drill

- Straight drill to shorten surgery steps when using Surgical Guide
- Recommended speed: 1,200~1,500rpm
- Material: Stainless Steel (TrimRite®)

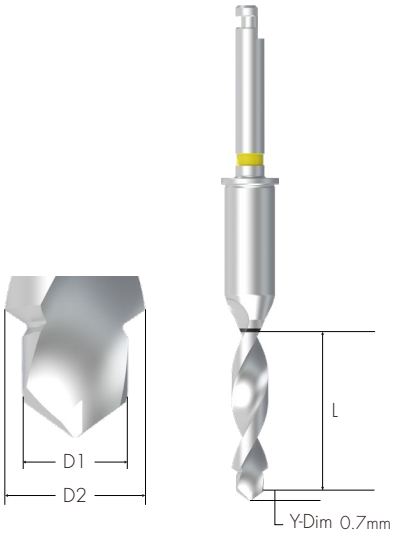

* Optional

L (mm) \ Fixture	F3.0 (Narrow)	F3.5 (Mini)
5.0	-	-
7.0	-	-
8.5	ZGTD2708M	ZGTD3008M
10.0	ZGTD2710M	ZGTD3010M
11.5	ZGTD2711M	ZGTD3011M
13.0	ZGTD2713M	ZGTD3013M
15.0	ZGTD2715M*	ZGTD3015M*
Diameter D1/D2 (mm)	Ø 1.8 / 2.2	Ø 2.2 / 3.0
Color	Pink	Yellow

ZENEX GUIDE MINI KIT Instruments

ZENEX Guide Cortical Drill

- Drill used for removing cortical bone from hard bone when using Surgical Guide
- Recommended speed: 500~800rpm
- Material: Stainless Steel (TrimRite)

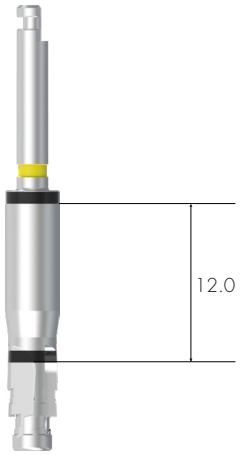

Fixture	F3.0 (Narrow)	F3.5 (Mini)
Drill	ZGCDNF30M	ZGCDF35M
Color	Pink	Yellow

ZENEX Guide Fixture Driver

- For Contra Angle: Directly attached to fixture by connecting to handpiece when using Implant motor
- For Wrench: Directly attached to fixture by using Torque Wrench
- Recommended speed: 20rpm
- Separate kits for each system contain only the drivers for that system.
  (I-System Kit Code: ZENGMSKIT, T-System Kit Code: ZENGMTKIT, R-System Kit Code: ZENGMRKIT)
- Material: Stainless Steel (TrimRite®)

I-System Narrow

	Contra Angle	Wrench
		
Fixture (Narrow)	F3.0	F3.0
	ZGFDCSN21M	ZGFDRSN21M

I-System Mini

	Contra Angle	Wrench
		
Fixture (Mini)	F3.5	F3.5
	ZGFDCSM25M	ZGFDRSM25M

T-System Mini

	Contra Angle	Wrench
		
Fixture (Mini)	F3.5	F3.5
	ZGFDCTM21M	ZGFDRTM21M

R-System Mini

	Contra Angle	Wrench
		
Fixture (Mini)	F3.5	F3.5
	ZGFDCRM23M	ZGFDRRM23M

ZENEX GUIDE MINI KIT Instruments

Shank Driver

- It is connected to the fixture driver for contra angle and used by hand or connected to the torque wrench to install or remove the fixture.
- Material: Stainless Steel (TrimRite®)



SD70

1.2 Hex Driver

- Driver for connecting with Torque Wrench
- Used for connecting to cover screw and surgical instrument with 1.2 Hex
- Follow recommended tightening torque calculation value
- Be sure to check transformation of Hex tip before use
- Material: Stainless Steel+Titanium alloy

L (mm)	10.0	15.0
	HEDR1210	HEDR1215

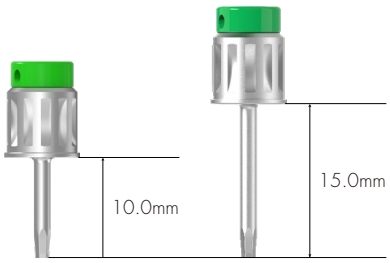

Torque Wrench

- Used for placing fixture and tightening implant abutments and screws
- Confirm torque calculation value by pulling the bar to be aligned with the marked line
- Recommended to use by pressing head to prevent detachment of Torque Wrench and surgical instruments
- Material: Stainless Steel



TW60B

Depth Gauge

- Measuring drilling depth
- Measurable depth: 6~20mm
- Material: Titanium alloy

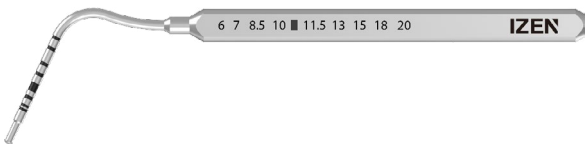

DG1720

Drilling Protocol

Mini

		Initial Drill (Ø2.2)	Twist Drill		Cortical Drill
			F3.0 (Ø2.7)	F3.5 (Ø3.0)	Normal/Hard
					
 **F3.0**	Soft	●	●		
	Normal/Hard	●	●		●
 **F3.5**	Soft	●		●	
	Normal/Hard	●		●	●

Drilling Sequence

Ø 3.5mm Fixture

(ZENEX MULTI & PLUS R-System Mini)

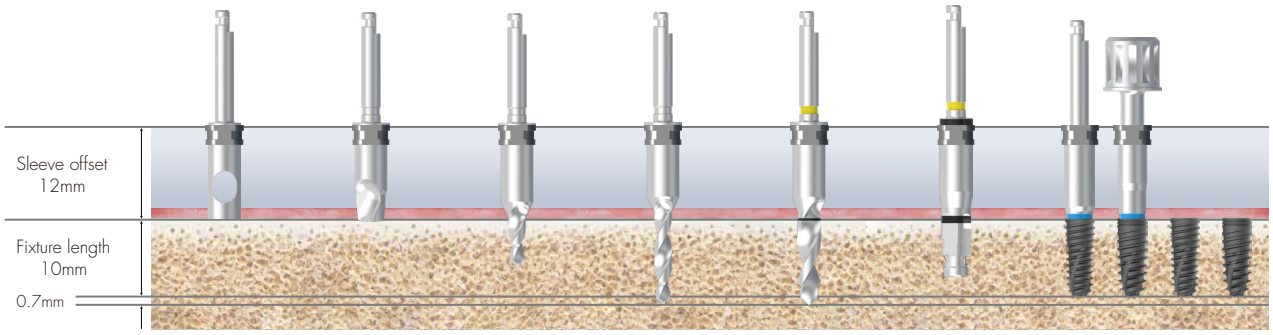

Bone Quality	Tissue Punch	Flattening Drill	Initial Drill (Ø2.2)	Initial Drill (Ø2.2)	Twist Drill (Ø3.0)	Cortical Drill	Ø3.5 Fixture
Soft	▶	(▶)	▶	▶	▶		Implant Placement
Normal / Hard	▶	(▶)	▶	▶	▶	▶	

ZENEX GUIDE WIDE KIT

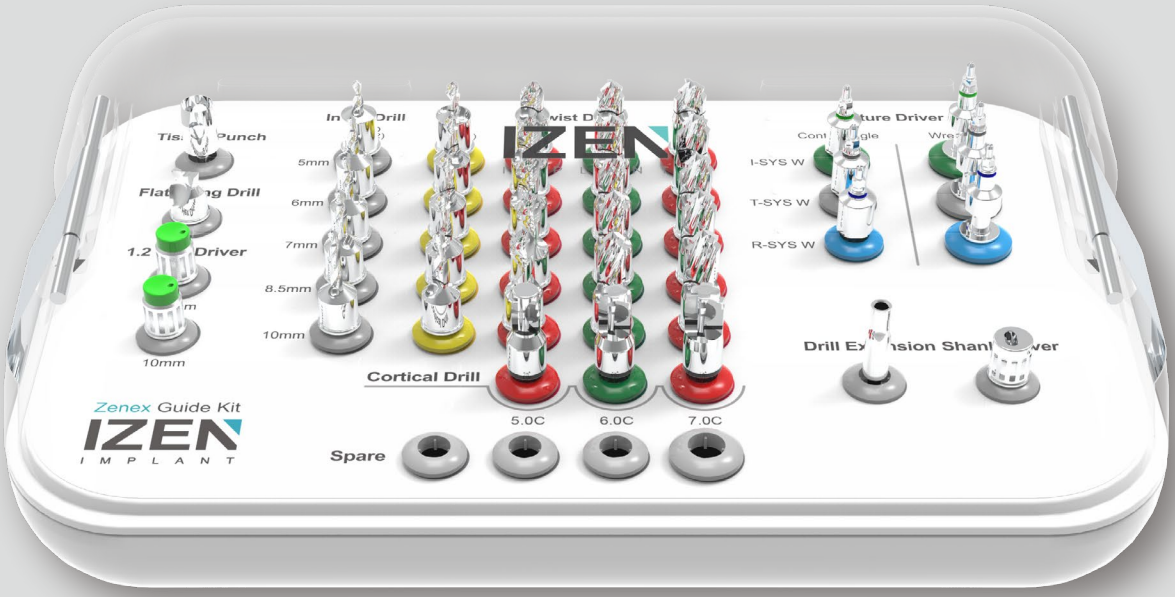



R-System

ZENEX GUIDE WIDE KIT
(ZENGWKIT)

Composition on lower kit tray



Depth Gauge
DG1720

Torque Wrench
TW60B

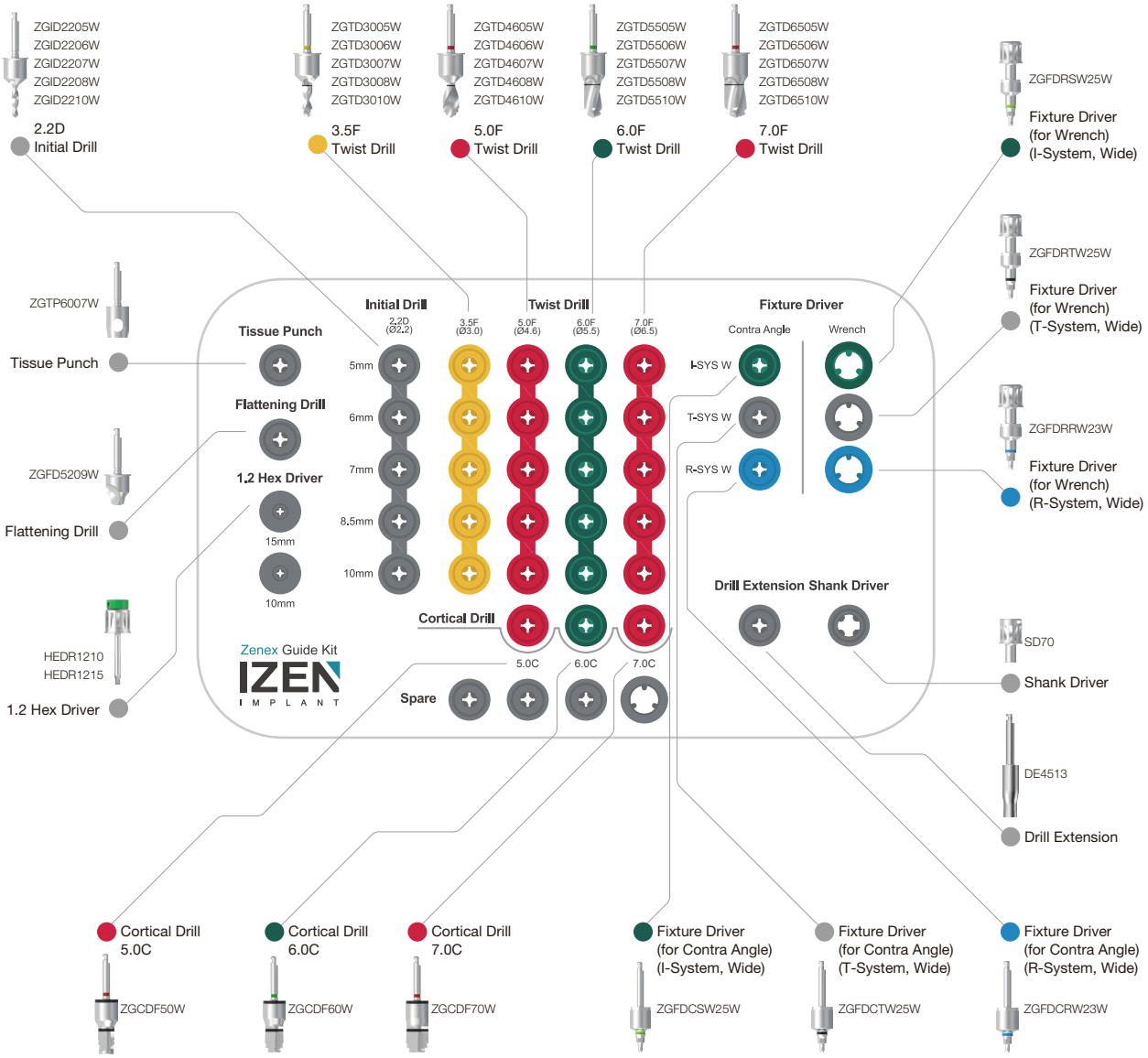

ZENEX GUIDE WIDE KIT
R-System (ZENGWRKIT)

Composition on lower kit tray

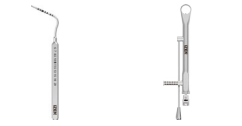

Depth Gauge
DG1720

Torque Wrench
TW60B

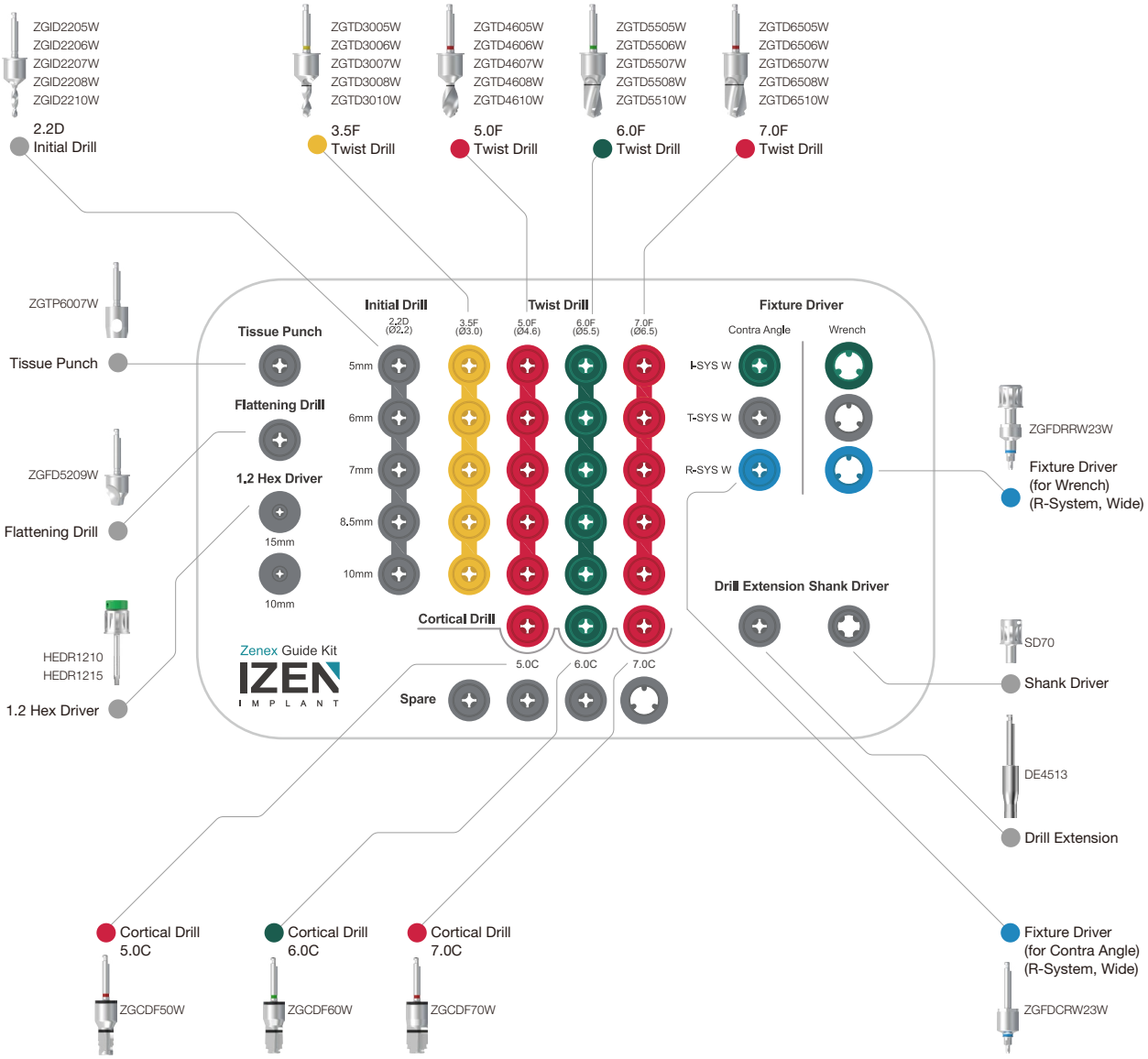

ZENEX GUIDE WIDE KIT Instruments

ZENEX Guide Tissue Punch

- Drill used for removing gingiva when using Surgical Guide
- Recommended speed: 1,200~1,500rpm
- Material: Stainless Steel (TrimRite®)
- Offest : 9mm



Fixture (Wide)	F5.0	F6.0	F7.0
Tissue Punch		ZGTP6007W	
Diameter (mm)		Ø6.0	
Color		Metal	

ZENEX Guide Flattening Drill

- Used for narrow or uneven ridges
- Recommended to use before Initial Drill
- Stable cutting without splashing with multiple cutting edges
- Recommended speed: 1,200~1,500rpm
- Material: Stainless Steel (TrimRite®)

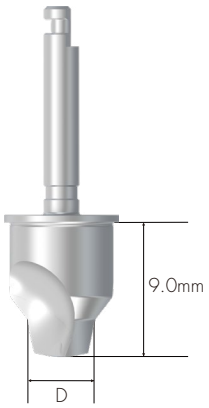

Fixture (Wide)	F5.0	F6.0	F7.0
Drill (Offset)		ZGFD5209W (9mm)	
Diameter (mm)		Ø5.2	
Color		Metal	

ZENEX GUIDE WIDE KIT Instruments

Drill Extension

- Lengthen surgical instrument in use by connecting to drill and Implant motor
- Be sure to use after accurate connection to prevent product detachment or bending that connected to Drill Extension
- Material: Stainless Steel (TrimRite®) +Titanium alloy

DE4513

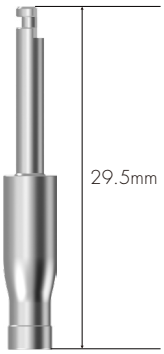

ZENEX Guide Initial Drill

- Drill to mark base hole on the bone for easy initial drilling after Tissue Punch when using Surgical Guide
- Recommended speed: 1,200~1,500rpm
- Material: Stainless Steel (TrimRite®)

* Optional

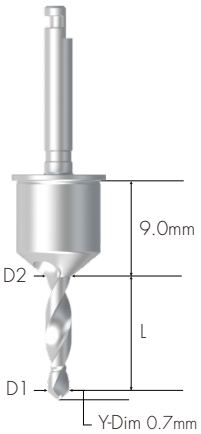

L (mm) \ Fixture (Wide)	F5.0	F6.0	F7.0
5.0		ZGID2205W	
6.0		ZGID2206W	
7.0		ZGID2207W	
8.5		ZGID2208W	
10.0		ZGID2210W	
11.0		ZGID2211W*	
Diameter D1/D2 (mm)		Ø 1.8 / 2.2	

ZENEX Guide Twist Drill

- Straight drill to shorten surgery steps when using Surgical Guide
- Recommended speed: 1,200~1,500rpm
- Material: Stainless Steel (TrimRite®)

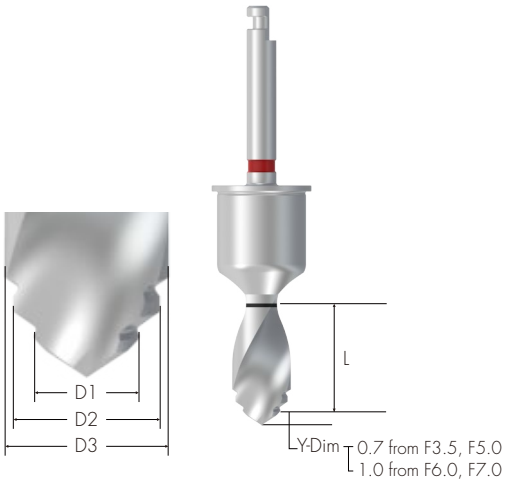

* Optional

L (mm) \ Fixture (Wide)	F3.5	F5.0	F6.0	F7.0
5.0	ZGTD3005W	ZGTD4605W	ZGTD5505W	ZGTD6505W
6.0	ZGTD3006W	ZGTD4606W	ZGTD5506W	ZGTD6506W
7.0	ZGTD3007W	ZGTD4607W	ZGTD5507W	ZGTD6507W
8.5	ZGTD3008W	ZGTD4608W	ZGTD5508W	ZGTD6508W
10.0	ZGTD3010W	ZGTD4610W	ZGTD5510W	ZGTD6510W
11.0	ZGTD3011W*	ZGTD4611W*	ZGTD5511W*	ZGTD6511W*
Diameter D1/D2/D3 (mm)	Ø 2.2 / 3.0	Ø 3.0 / 4.1 / 4.6	Ø 4.6 / 5.5	Ø 5.5 / 6.5
Color	Yellow	Red	Green	Red

ZENEX GUIDE WIDE KIT Instruments

ZENEX Guide Cortical Drill

- Drill used for removing cortical bone from hard bone when using Surgical Guide
- Recommended speed: 500~800rpm
- Material: Stainless Steel (TrimRite®)

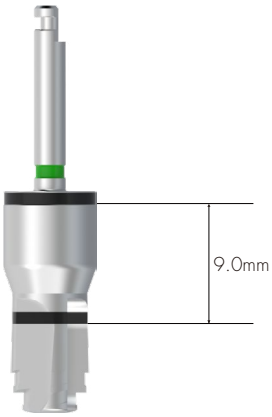

Fixture (Wide)	F5.0	F6.0	F7.0
Drill	ZGCDF50W	ZGCDF60W	ZGCDF70W
Color	Red	Green	Red

ZENEX Guide Fixture Driver

- For Contra Angle: Directly attached to fixture by connecting to handpiece when using Implant motor
- For Wrench: Directly attached to fixture by using Torque Wrench
- Recommended speed: 20rpm
- Separate kits for each system contain only the drivers for that system.
  (I-System Kit Code : ZENGWSKIT, T-System Kit Code : ZENGWTKIT, R-System Kit Code : ZENGWRKIT)
- Material: Stainless Steel (TrimRite®)

I-System

	Contra Angle	Wrench
Fixture (Wide)	F5.0 F6.0 F7.0	F5.0 F6.0 F7.0
	ZGFDCSW25W	ZGFDRSW25W

T-System

	Contra Angle	Wrench
		
Fixture (Wide)	F5.0 F6.0 F7.0	F5.0 F6.0 F7.0
	ZGFDCTW25W	ZGFDRTW25W

R-System

	Contra Angle	Wrench
		
Fixture (Wide)	F5.0 F6.0 F7.0	F5.0 F6.0 F7.0
	ZGFDCRW23W	ZGFDRRW23W

ZENEX GUIDE WIDE KIT Instruments

Shank Driver

- It is connected to the fixture driver for contra angle and used by hand or connected to the torque wrench to install or remove the fixture.
- Material: Stainless Steel (TrimRite®)



SD70

1.2 Hex Driver

- Driver for connecting with Torque Wrench
- Used for connecting to cover screw and surgical instrument with 1.2 Hex
- Follow recommended tightening torque calculation value
- Be sure to check transformation of Hex tip before use
- Material: Stainless Steel+Titanium alloy

L (mm)	10.0	15.0
	HEDR1210	HEDR1215

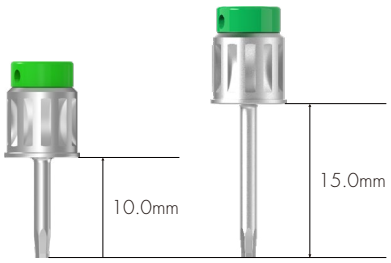

Torque Wrench

- Used for placing fixture and tightening implant abutments and screws
- Confirm torque calculation value by pulling the bar to be aligned with the marked line
- Recommended to use by pressing head to prevent detachment of Torque Wrench and surgical instruments
- Material: Stainless Steel



TW60B

Depth Gauge

- Measuring drilling depth
- Measurable depth: 6~20mm
- Material: Titanium alloy

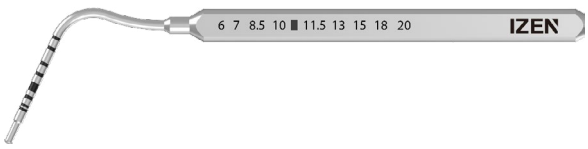

DG1720

Drilling Protocol

Wide

		Initial Drill (Ø2.2)	Twist Drill				Cortical Drill
			F3.5 (Ø3.0)	F5.0 (Ø4.6)	F6.0 (Ø5.5)	F7.0 (Ø6.5)	Normal/Hard
							
 **F5.0**	Soft	●	●	●			
	Normal/Hard	●	●	●			●
 **F6.0**	Soft	●	●	●	●		
	Normal/Hard	●	●	●	●		●
 **F7.0**	Soft	●	●	●	●	●	
	Normal/Hard	●	●	●	●	●	●

Drilling Sequence

Ø 5.0mm Fixture

(ZENEX MULTI & PLUS R-System Wide)

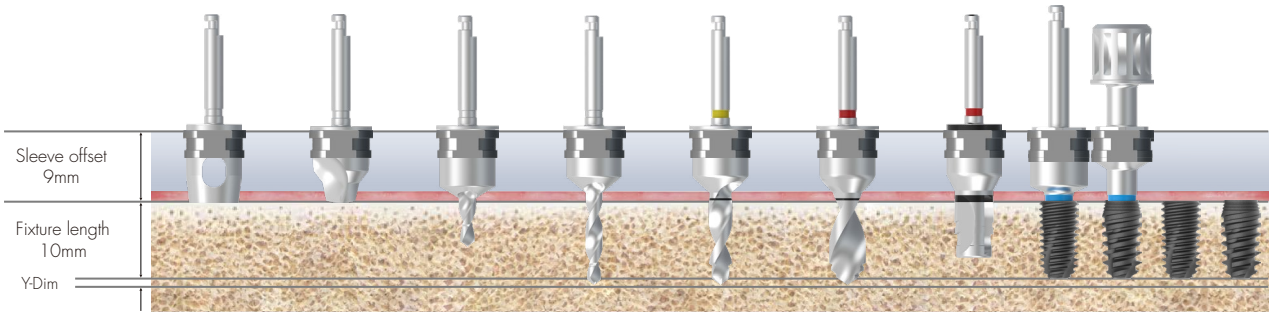

Bone Quality	Tissue Punch	Flattening Drill	Initial Drill (Ø2.2)	Initial Drill (Ø2.2)	Twist Drill (Ø3.0)	Twist Drill (Ø4.6)	Cortical Drill	Ø5.0 Fixture
Soft	▶	(▶)	▶	▶	▶	▶		Implant Placement
Normal / Hard	▶	(▶)	▶	▶	▶	▶	▶	

Select Twist Drill (Product code: ZGTD3005W, ZGTD4605W) according to the situation (optional)

Ø 6.0mm Fixture

(ZENEX MULTI R-System Wide)

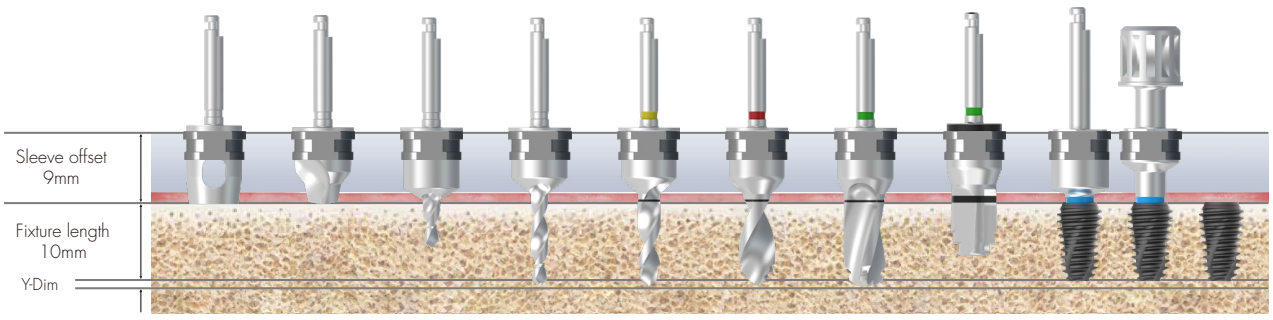

Bone Quality	Tissue Punch	Flattening Drill	Initial Drill (Ø2.2)	Initial Drill (Ø2.2)	Twist Drill (Ø3.0)	Twist Drill (Ø4.6)	Twist Drill (Ø5.5)	Cortical Drill	Ø6.0 Fixture
Soft	▶	(▶)	▶	▶	▶	▶	▶		Implant Placement
Normal / Hard	▶	(▶)	▶	▶	▶	▶	▶	▶	

Select Twist Drill (Product code: ZGTD3005W, ZGTD4605W, ZGTD5505W) according to the situation (optional)

Drilling Sequence

Ø 7.0mm Fixture

(ZENEX MULTI R-System Wide)

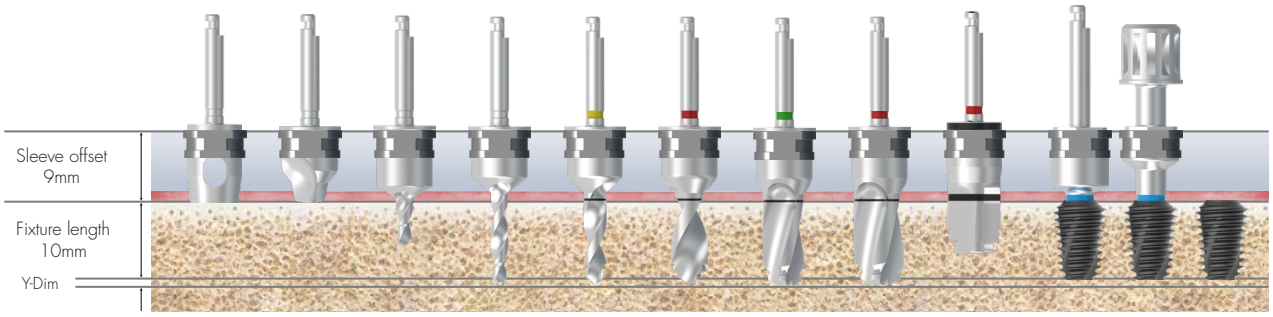

Bone Quality	Tissue Punch	Flattening Drill	Initial Drill (Ø2.2)	Initial Drill (Ø2.2)	Twist Drill (Ø3.0)	Twist Drill (Ø4.6)	Twist Drill (Ø5.5)	Twist Drill (Ø6.5)	Cortical Drill	Ø7.0 Fixture
Soft	▶	(▶)	▶	▶	▶	▶	▶	▶		Implant Placement
Normal / Hard	▶	(▶)	▶	▶	▶	▶	▶	▶	▶	

Select Twist Drill (Product code: ZGTD3005W, ZGTD4605W, ZGTD5505W, ZGTD6505W) according to the situation (optional)

IZEN
IMPLANT

ZENEX GUIDE KIT appendix

Sleeve

Code	ZGS53R
Inner Diameter	Ø 5.30
Kit	ZENEX Guide Kit
Fixture	F3.5 / F4.0 / F4.5 / F5.0
Material	Titanium alloy

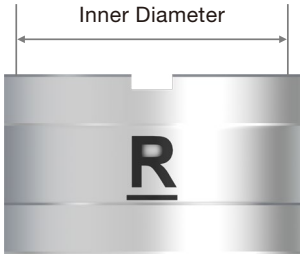

Sleeve Offset (F4.0 x 10mm Fixture)

- When the sleeve is placed upward due to thick gingiva or interference with adjacent teeth

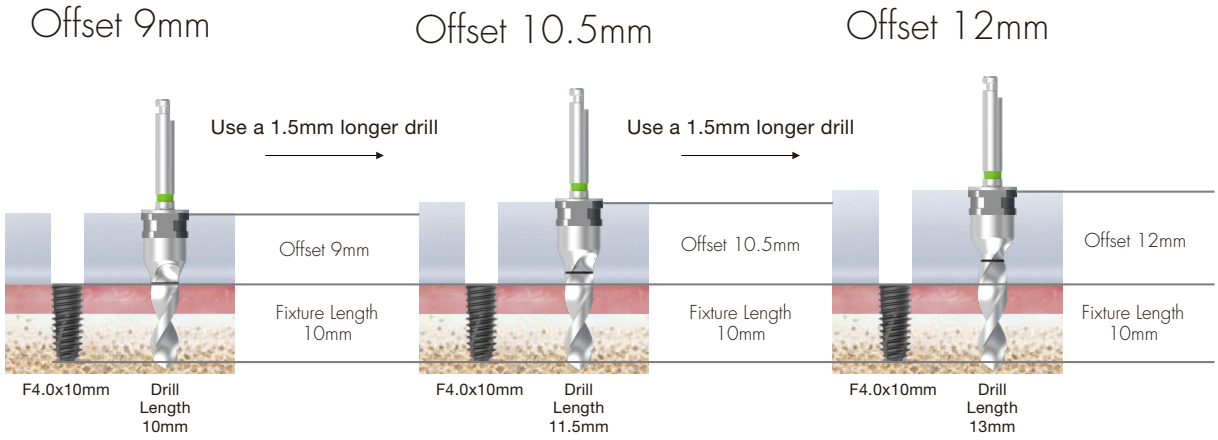

Cortical Drill

- Drill used for removing cortical bone Depth adjustable by sleeve offset

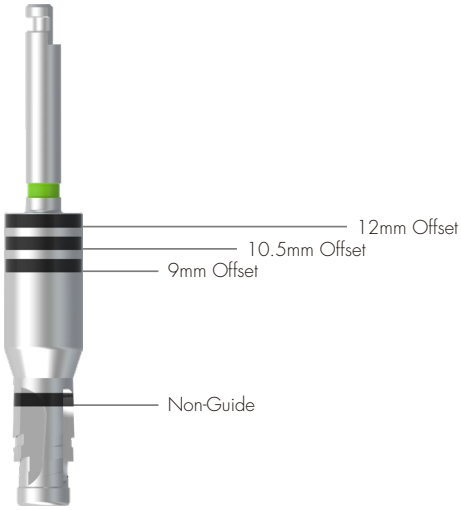

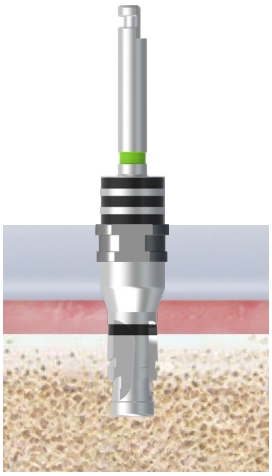

Normal Bone/ Hard bone

Fixture Driver

- After 70-80% of implantation with engine, implantation with Torque Wrench

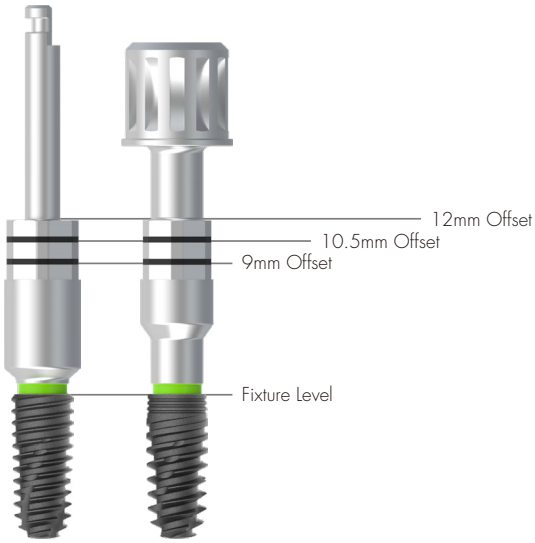

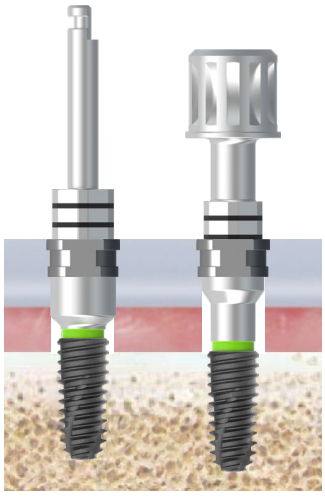

70~80% implantation

finish with ratchet

ZENEX GUIDE KIT appendix

Fixture Direction

- Control the fixture direction by matching the groove of the sleeve and the shape of the driver

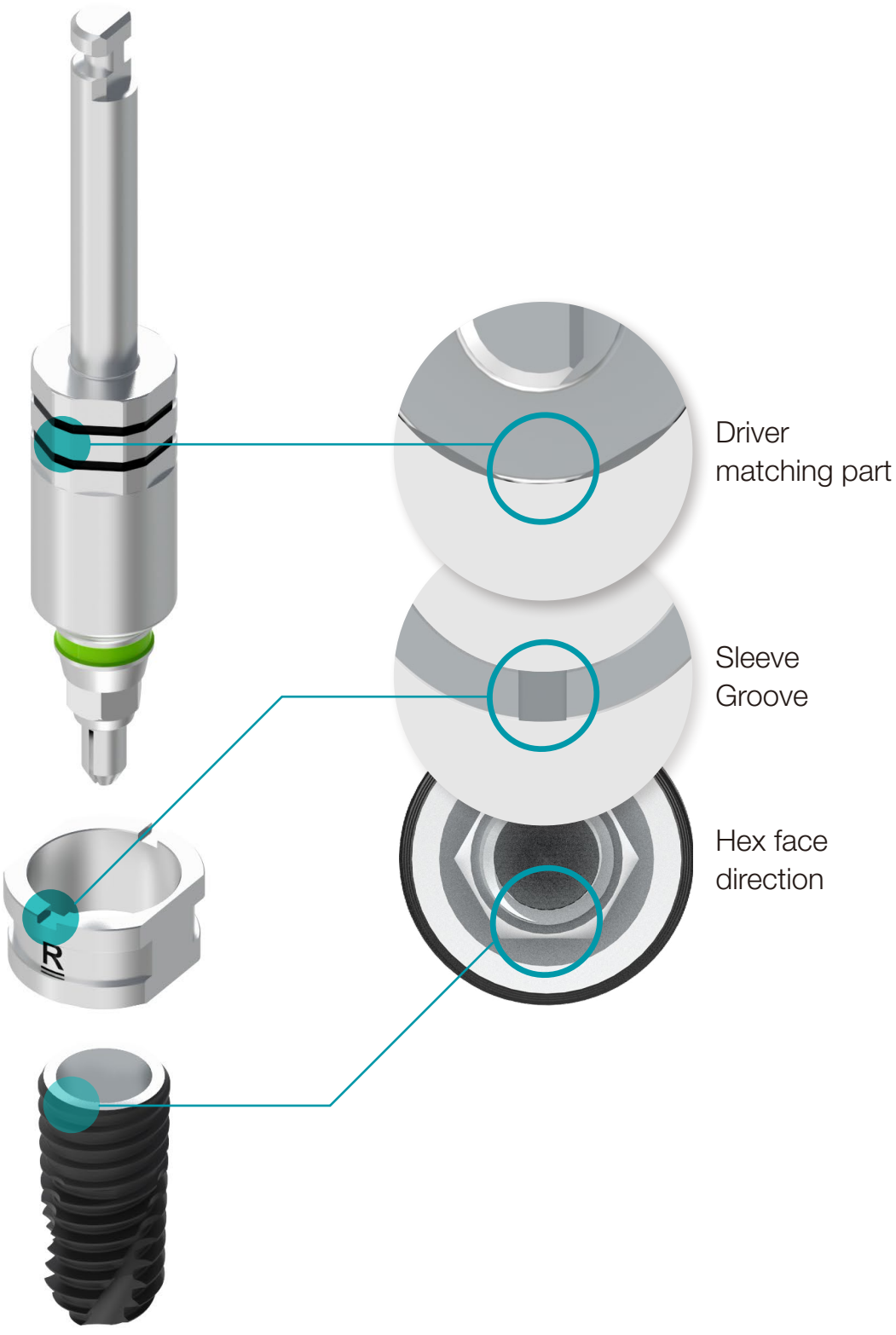

Bone Flattening Drill

- Bone leveling for accuracy prior to initial drilling

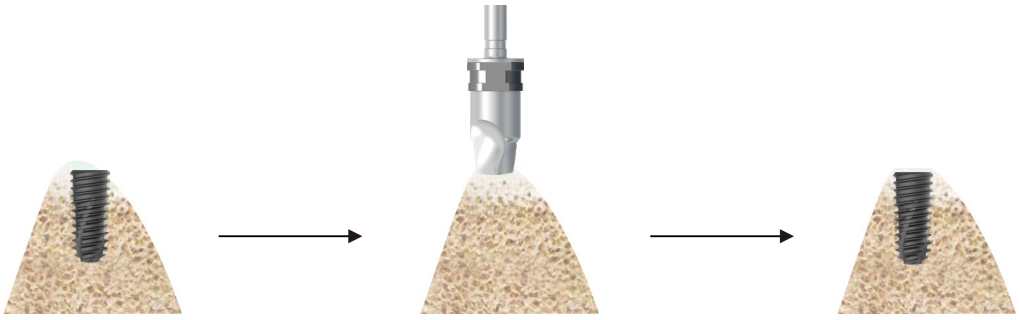

When planning implantation on inclined or irregular bones

Bone flattening

Stable implant placement

Guide Anchor Screw

- Used to firmly fix the Surgical guide, can be used for edentulous cases Applicable at the procedure planning stage



ZENEX GUIDE MINI KIT appendix

Sleeve

Code	ZGS41M
Inner Diameter	Ø 4.10
Kit	ZENEX Guide Mini Kit
Fixture	F3.0(Narrow) / F3.5
Material	Titanium alloy

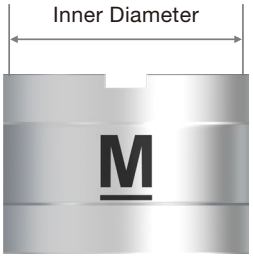

Sleeve Offset (F3.5 x 10mm Fixture)

- Use of Mini only sleeve Offset 12mm

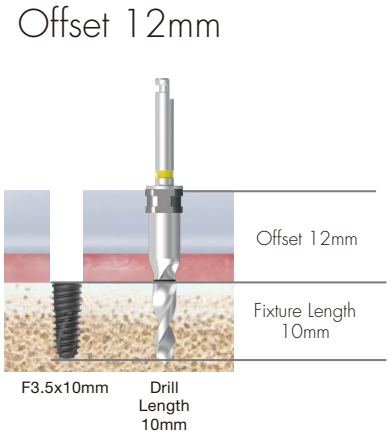

Cortical Drill

- Drill used for removing cortical bone Depth adjustable by sleeve offset

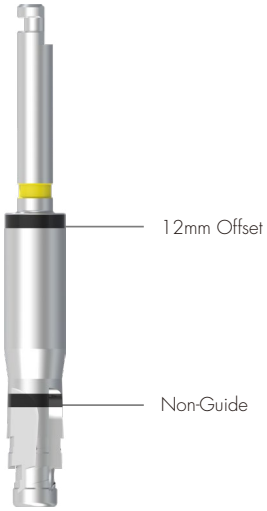

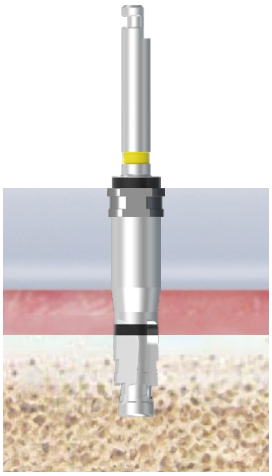

Normal Bone/ Hard bone

Fixture Driver

- After 70-80% of implantation with engine, implantation with Torque Wrench

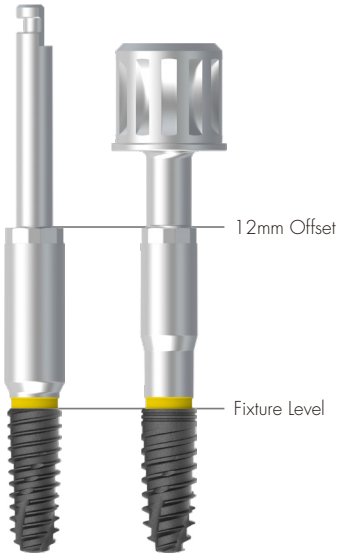

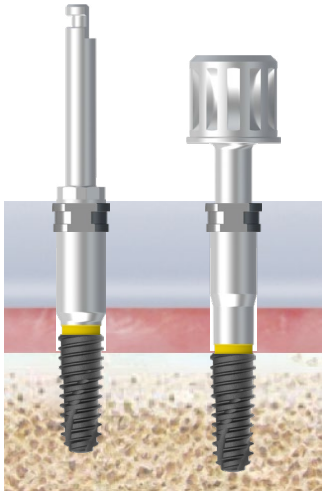

70~80% implantation

finish with ratchet

ZENEX GUIDE MINI KIT appendix

Fixture Direction

- Control the fixture direction by matching the groove of the sleeve and the shape of the driver

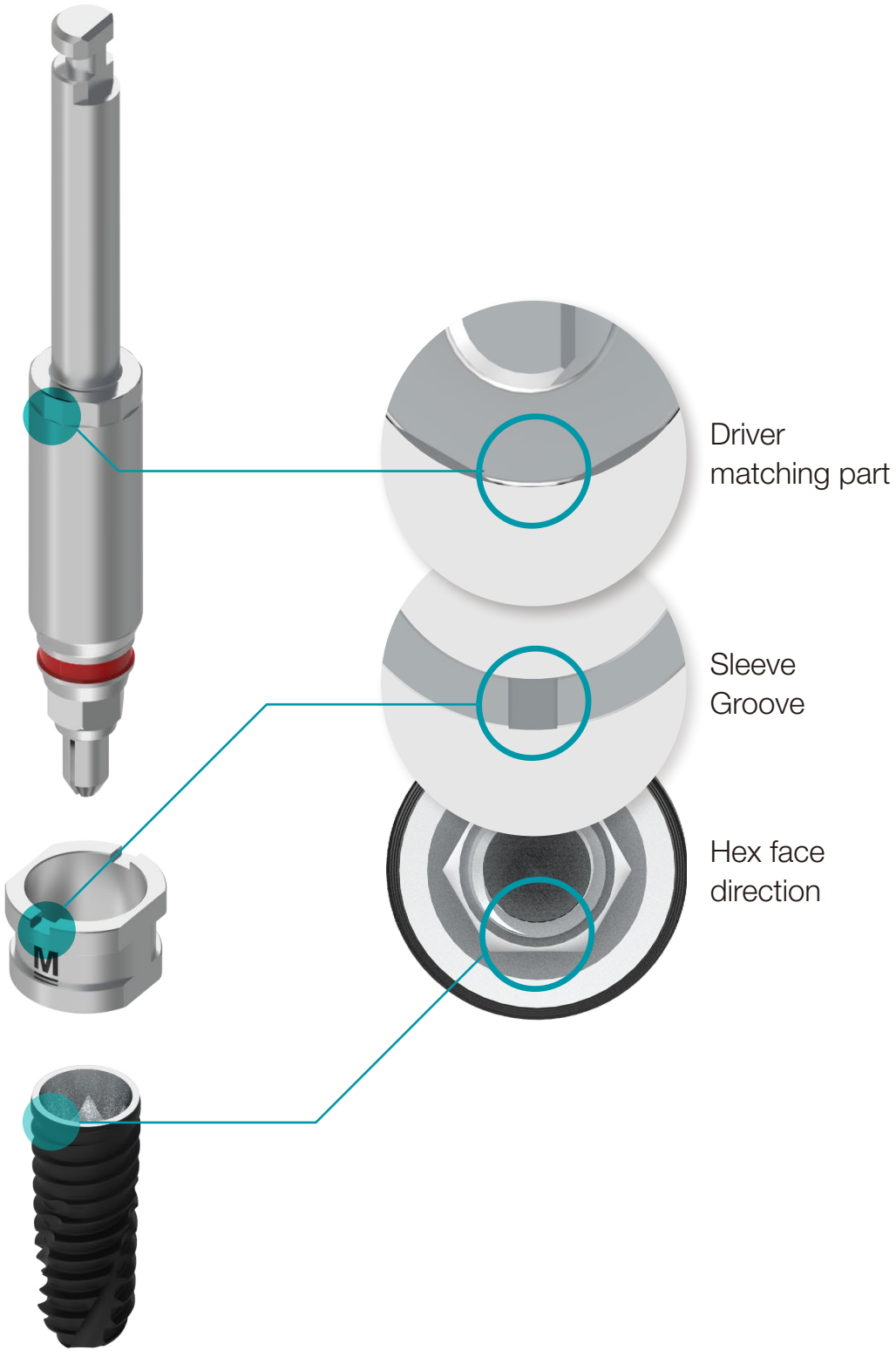

Bone Flattening Drill

- Bone leveling for accuracy prior to initial drilling

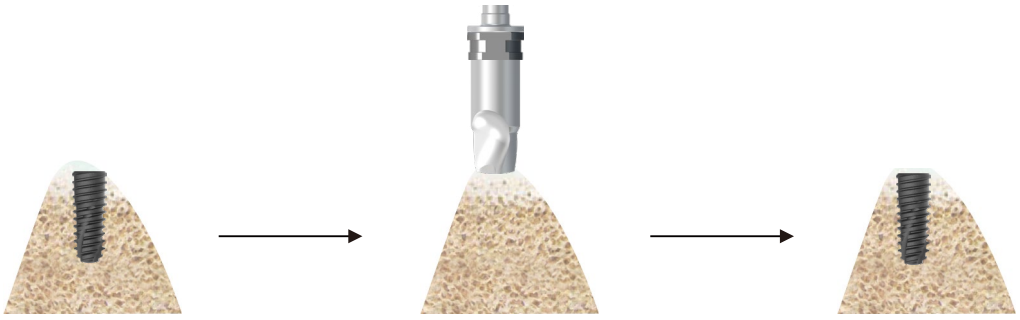

When planning implantation on inclined or irregular bones

Bone flattening

Stable implant placement

ZENEX GUIDE WIDE KIT appendix

Sleeve

Code	ZGS70W
Inner Diameter	Ø7.00
Kit	ZENEX Guide Wide Kit
Fixture	F5.0 / F6.0 / F7.0
Material	Titanium alloy

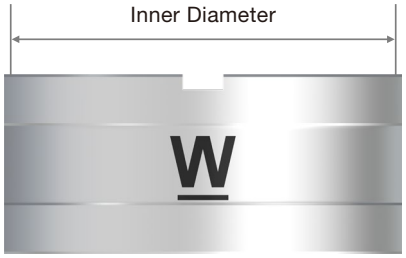

Sleeve Offset (F5.0 x 10mm Fixture)

- Use of Wide only sleeve offset 9mm

Offset 9mm

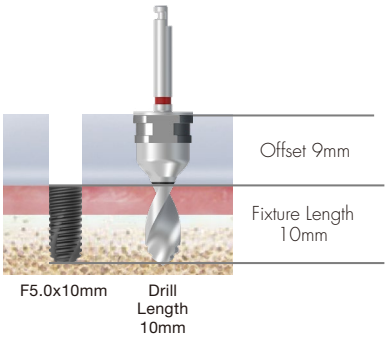

Cortical Drill

- Drill used for removing cortical bone Depth adjustable by sleeve offset

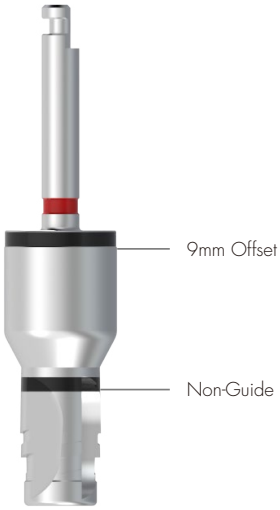

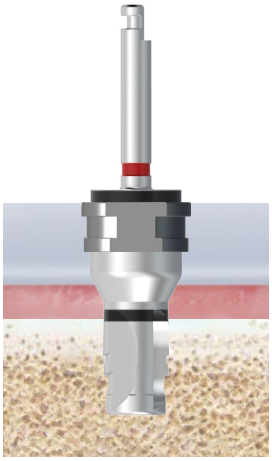

Normal Bone/ Hard bone

Fixture Driver

- After 70-80% of implantation with engine, implantation with Torque Wrench

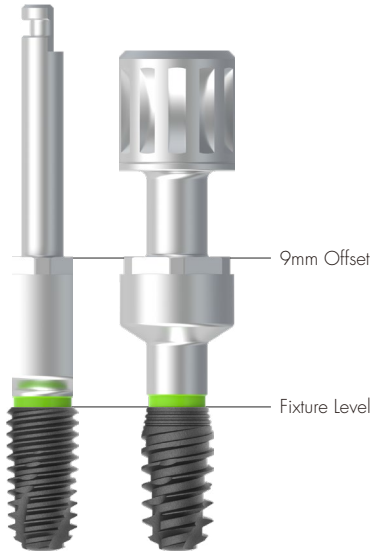

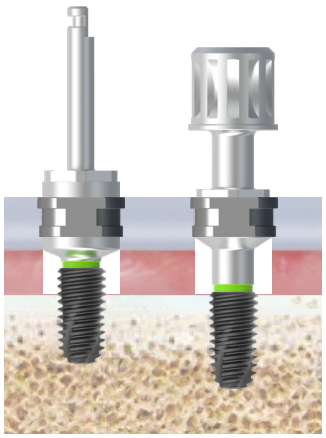

70~80% implantation

finish with ratchet

ZENEX GUIDE WIDE KIT appendix

Fixture Direction

- Control the fixture direction by matching the groove of the sleeve and the shape of the driver

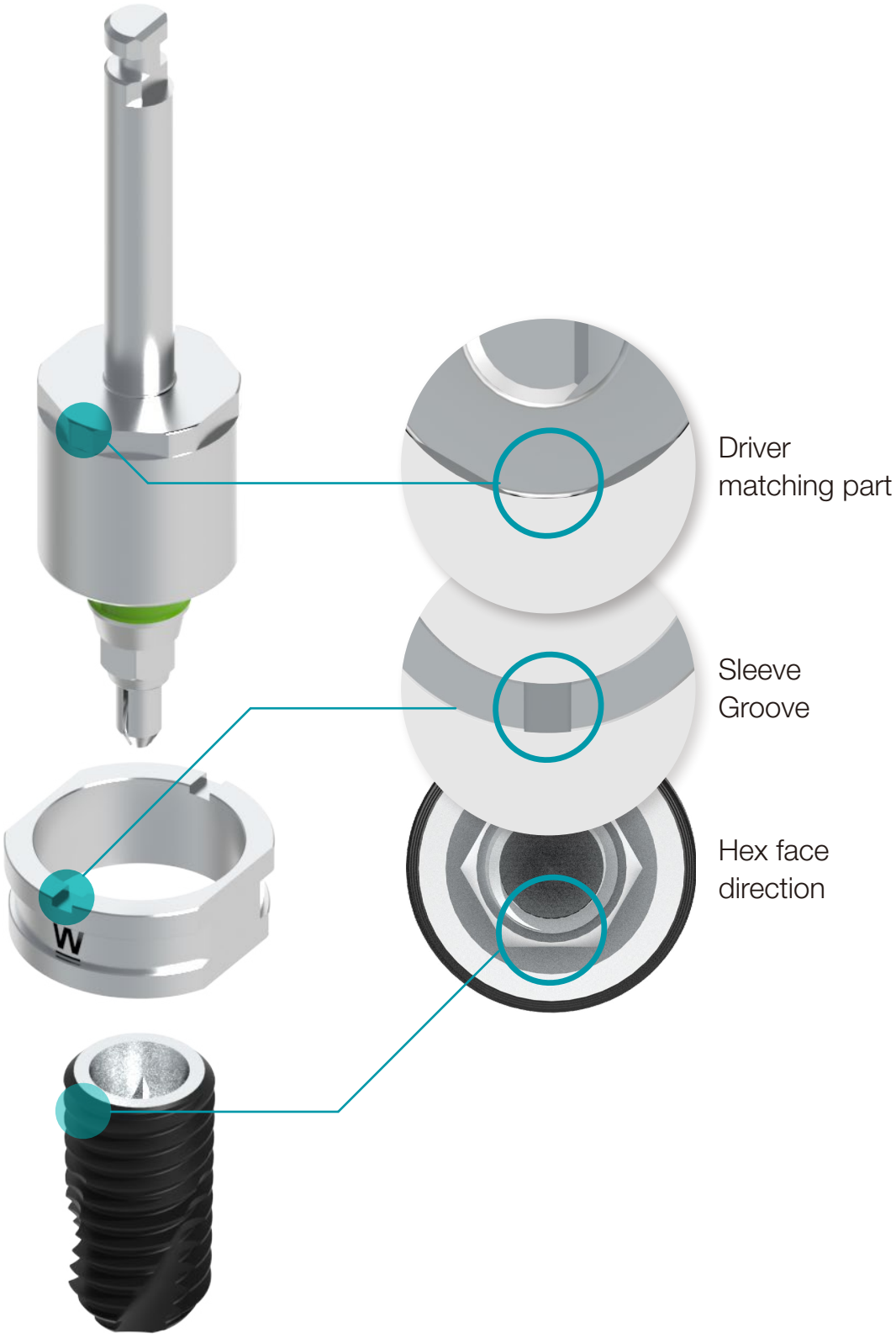

Bone Flattening Drill

- Bone leveling for accuracy prior to initial drilling

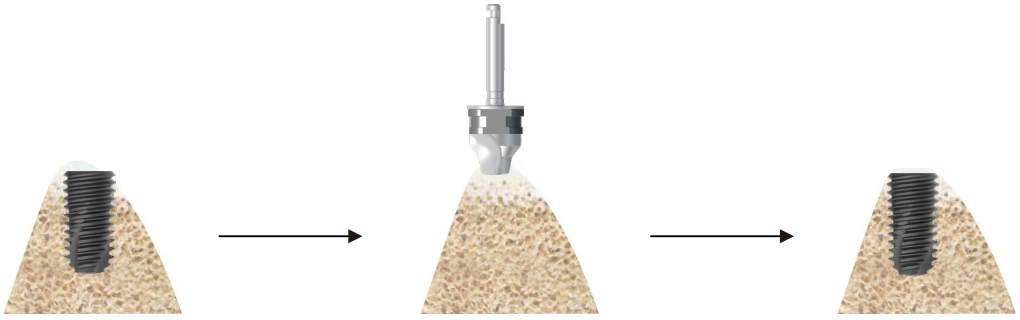

When planning implantation on inclined or irregular bones

Bone flattening

Stable implant placement

Other Surgical Instruments

Tissue Punch

- Marked with a gap of 2mm each to measure gingiva height
- Surgical instrument for Flapless surgery
- Material: Stainless Steel (TrimRite®)

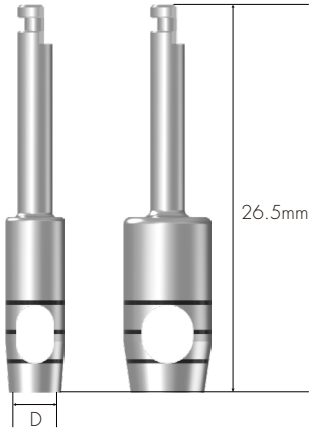

D (mm)	Ø3.3	Ø3.8	Ø4.3	Ø4.8	Ø5.3
	TP3308	TP3808	TP4308	TP4808	TP5308

Trephine Drill

- Use for collecting autogenous bone or removing failed fixture
- In case of Superwide fixture placement, available to use as initial drill
- Material: Stainless Steel (TrimRite®)

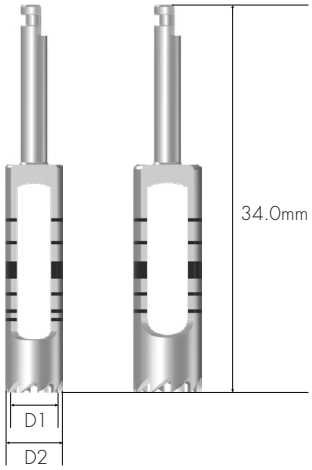

D1/D2 (mm)	Ø3.7/4.5	Ø4.2/5.0	Ø4.7/5.5	Ø5.2/6.0	Ø5.7/6.5	Ø6.2/7.0
	TD3718	TD4218	TD4718	TD5218	TD5718	TD6218

Bone Profiler

- Use for removing marginal bone around fixture during the one-stage and two-stages surgery
- Available to connect Healing Abutment by removing marginal bone after connecting Bone Profiler Guide Screw to the connection on Fixture
- Secure guided length of Bone Profiler Guide Screw to remove bone accurately for deeply placed fixture
- Bone Profiler Guide Screw is used for protecting fixture connection during use
- Material: Stainless Steel (TrimRite®)

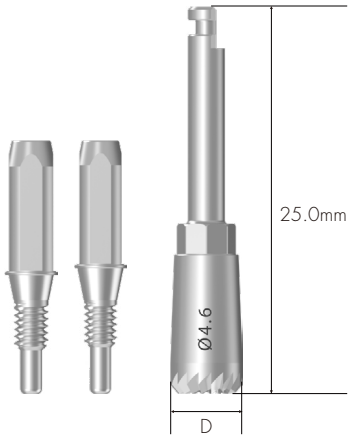

I-System ※ Only for I-System

D (mm)	Ø4.1 (For Ø3.0 X-Narrow)	Ø4.1 (For Ø3.0 Narrow)
	SBP41SXS	SBP41SNS

D (mm)	Ø4.1	Ø4.6	Ø5.6	Ø7.6
	SBP41SS	SBP46SS	SBP56SS	SBP76SS

T-System ※ Only for T-System

D (mm)	Ø4.1	Ø4.6	Ø5.6	Ø7.6
	SBP41TS	SBP46TS	SBP56TS	SBP76TS

R-System ※ Only for R-System

D (mm)	Ø4.1	Ø4.6	Ø5.6	Ø7.6
	SBP41RS	SBP46RS	SBP56RS	SBP76RS

	I-System				T-System	R-System	
	X-Narrow	Narrow	Mini	Regular	Mini	Mini	Regular
Bone Profiler Guide Screw	SBPGSSX14	SBPGSSN20	SBPGSSM20	SBPGSSR20	SBPGSTM20	SBPGSRM18	SBPGSRR18

Other Surgical Instruments

ZENEX Guide Start Drill

- Used for narrow or uneven ridges
- Stable cutting without splashing with multiple cutting edges
- Recommended to use before Twist Drill
- Stable drilling for follow-up drilling is possible
- Recommended speed: 1,200~1,500rpm
- Only for ZENEX Guide Kit (Mini, Wide specification not available)
- Material: Stainless Steel (TrimRite®)

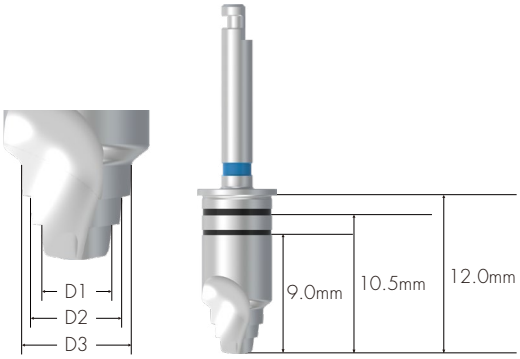

Fixture (Regular)	F3.5	F4.0	F4.5	F5.0
	ZGSD30R	ZGSD36R	ZGSD41R	ZGSD46R
Diameter (mm)	Ø 2.2 / 3.0	Ø 3.0 / 3.6	Ø 3.0 / 3.6 / 4.1	Ø 3.0 / 4.1 / 4.6
Color	Yellow	Green	Blue	Red

Information of Symbol



Catalog Number



Batch Code



Country of manufacture



Manufacturer



Consult instructions for use



Non-Sterile



Caution, Consult accompanying documents



Sterilized using irradiation



Do not re-use



Do not resterilize



Keep away from sunlight



Do not use if package is damaged and consult instructions for use

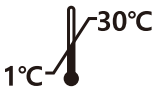

Temperature limitation



Use-by Date



Prescription Only



Authorized representative in Europe



Single sterile barrier system with protective packaging inside



Medical device



Unique device identifier



Specification



Packing Unit & Quantity



CE Mark



Ukrainian conformity assessment mark

The Izenimplant Implant System have not been evaluated for safety and compatibility in the MR environment. They have not been tested for heating, migration, or image artifact in the MR environment. The safety of Izenimplant Implant System in the MR environment is unknown. Scanning a patient who has this device may result in patient injury

ManufacturerIzenimplant Co.,Ltd.

1,2Dong, 26-32, Suworam 4-gil, Seotan-myeon, Pyeongtaek-si, Gyeonggi-do, 17703, Republic of Korea

Tel +82-31-662-0657 **Fax** +82-31-662-0658

IZEN IMPLANT

℞ only

Prescription Only

For USA Only

Federal law restricts this device to sale by or on the order of a dentist

EC REP

Authorized representative in Europe

KTR Europe GmbH

Mergenthalerallee 77, 65760, Eschborn, Germany

IZEN
IMPLANT

IZ-CAT-12 Rev.02(Aug/22)

R-SYSTEM ZENEX MULTI & PLUS

IZEN IMPLANT

HQ & Factory

17703
1, 2Dong, 26-32, Suworam 4-gil, Seotan-myeon,
Pyeongtaek-si, Gyeonggi-do, Republic of Korea

Overseas Business Department

07788
10F 1dong #1011,#1012, #1013, #1014 Central-Tower II, 158,
Magokseo-ro, Gangseo-gu, Seoul, Republic of Korea

Tel. +82-31-662-0657 (HQ) +82-2-3664-3666 (Sales) **Fax.** +82-31-662-0658

Izenimplant Co.,Ltd
www.izenimplant.com